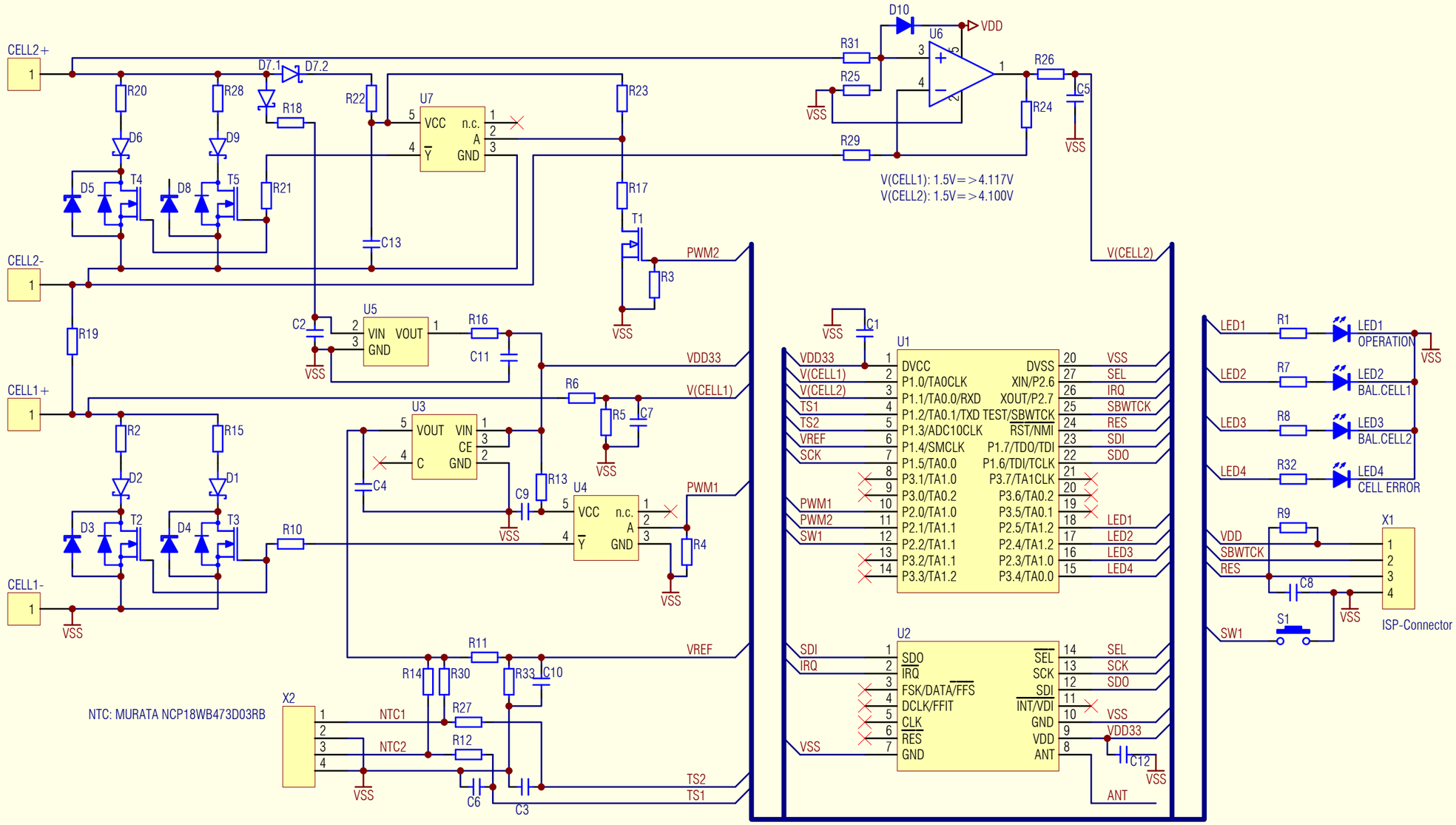

Schutzvermerk nach DIN34 beachten

Date		Rev.	3-Sep-2017	PCB	----		Replaced by:
Name	Wuellner	Name	----	File	BAL180_022.Sch		Replacement for:
Appr.	----	Appr.	----			E:\EW\Entwicklungen 2016\09-22-16\PS247_BMS_2016_11.ddb - BAL_BMS180\SCH_FINAL\BAL180_022.Sch	Sheet 1 of 1 Sheets