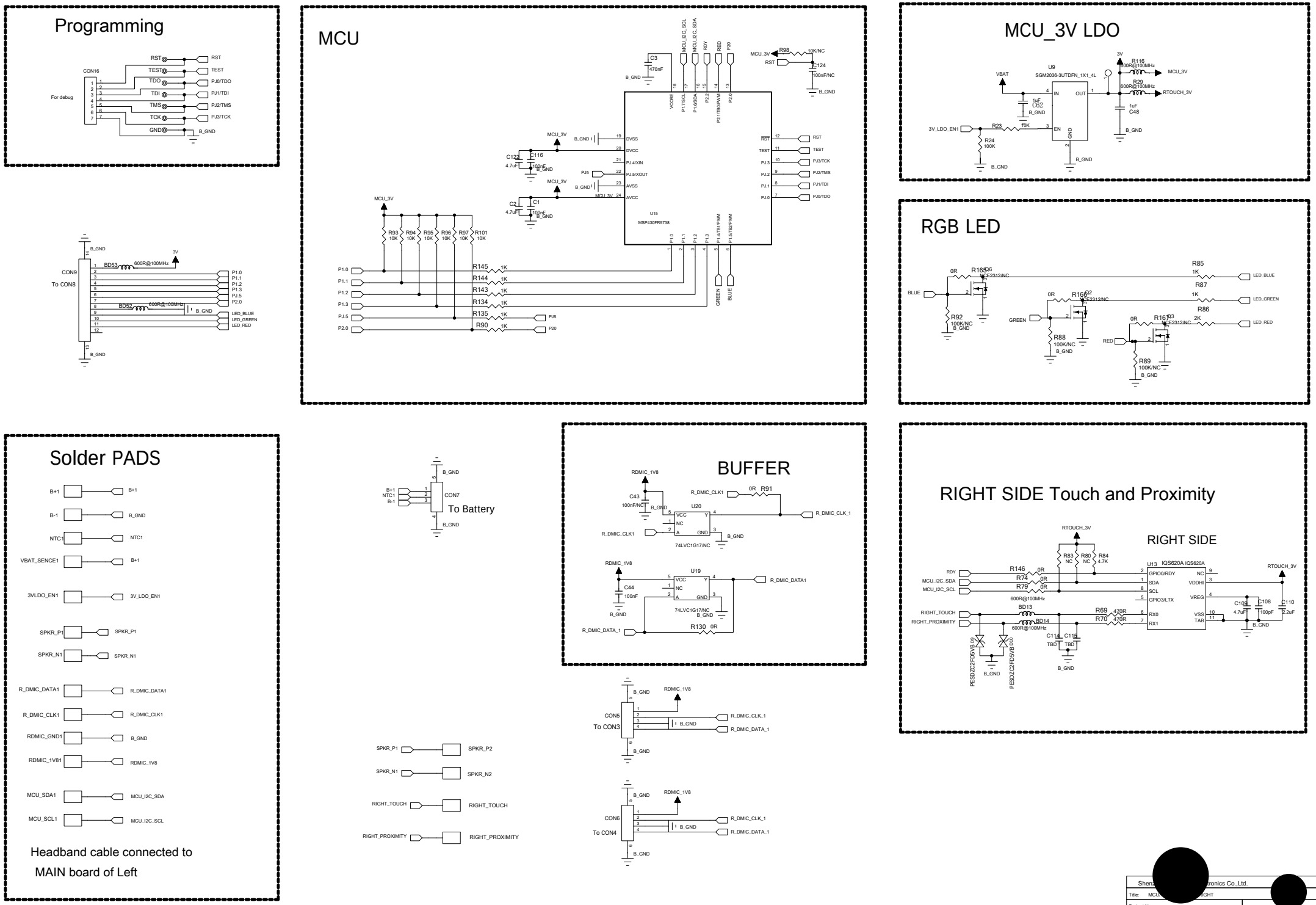
Programming
CON16
For debug
RST
TEST
TDO
TDI
TMS
TCK
GND
PJ0/TDO
PJ1/TDI
PJ2/TMS
PJ3/TCK
B_GND
MCU
U15
MSP430FR5738
MCU_3V
R98
10K/NC
C124
100nF/NC
C3
470nF
C122
4.7uF
C116
100nF
C2
C1
R93
R94
R95
R96
R97
R101
10K
R145
R144
R143
R134
R135
R90
1K
P1.0
P1.1
P1.2
P1.3
PJ.5
P2.0
GREEN
BLUE
MCU_3V LDO
U9
SGM2036-3UTDFN_1X1_4L
VBAT
3V
R116
600R@100MHz
R29
RTOUCH_3V
C62
C48
3V_LDO_EN1
R23
R24
100K
RGB LED
R165
R166
R167
R85
R87
R86
LED_BLUE
LED_GREEN
LED_RED
R92
R88
R89
100K/NC
CON9
To CON8
BD53
BD52
600R@100MHz
3V
Solder PADS
B+1
B-1
NTC1
VBAT_SENCE1
3VLDO_EN1
SPKR_P1
SPKR_N1
R_DMIC_DATA1
R_DMIC_CLK1
RDMIC_GND1
RDMIC_1V81
MCU_SDA1
MCU_SCL1
Headband cable connected to
MAIN board of Left
CON7
To Battery
SPKR_P2
SPKR_N2
RIGHT_TOUCH
RIGHT_PROXIMITY
BUFFER
RDMIC_1V8
C43
100nF/NC
R_DMIC_CLK1
R91
U20
74LVC1G17/NC
U19
C44
100nF
R130
R_DMIC_DATA1
R_DMIC_DATA_1
CON5
To CON3
CON6
To CON4
RIGHT SIDE Touch and Proximity
RIGHT SIDE
RTOUCH_3V
U13
IQS620A
R146
R74
R79
R83
R80
R84
4.7K
R69
R70
470R
BD13
BD14
600R@100MHz
C109
C108
C110
4.7uF
100pF
2.2uF
PESDZC2FD5VB
Shen
tronics Co.,Ltd.
Title: MCU
IGHT
Project No:
Drawned By:
Size: A2
Checked By: Seven.Guo
Date: 2021-04-22
Rev. V0P1
Sheet 3 of 3