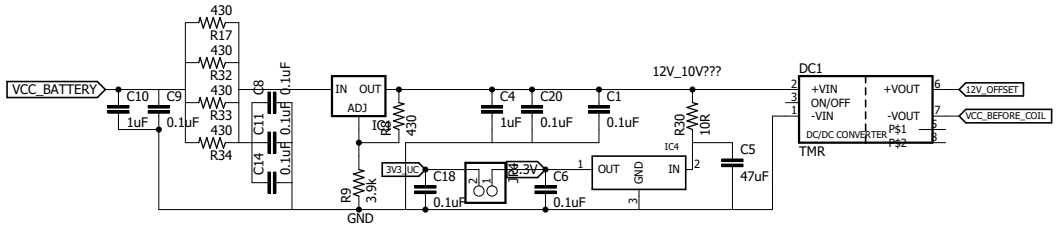

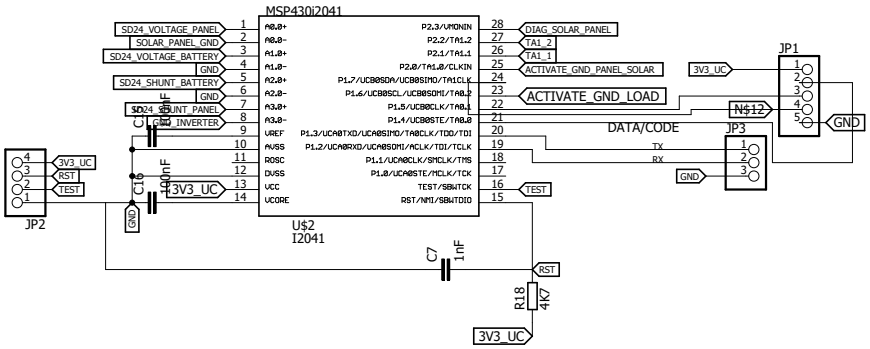

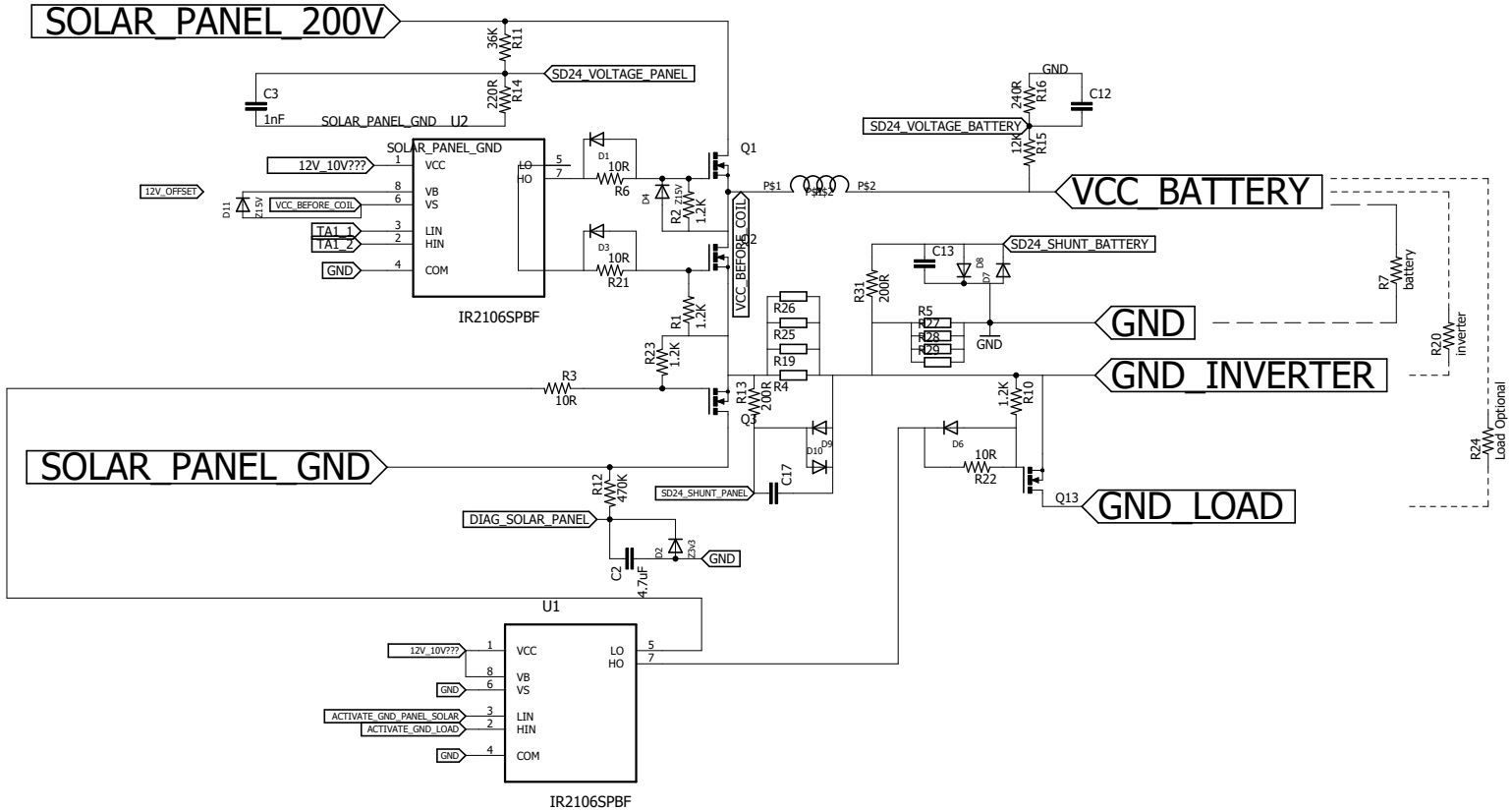

8/22/2018 9:57 PM f=0.69 D:\serghei\MPPT2\schematic\MPPT 4.0 v1.0.sch (Sheet: 1/1)