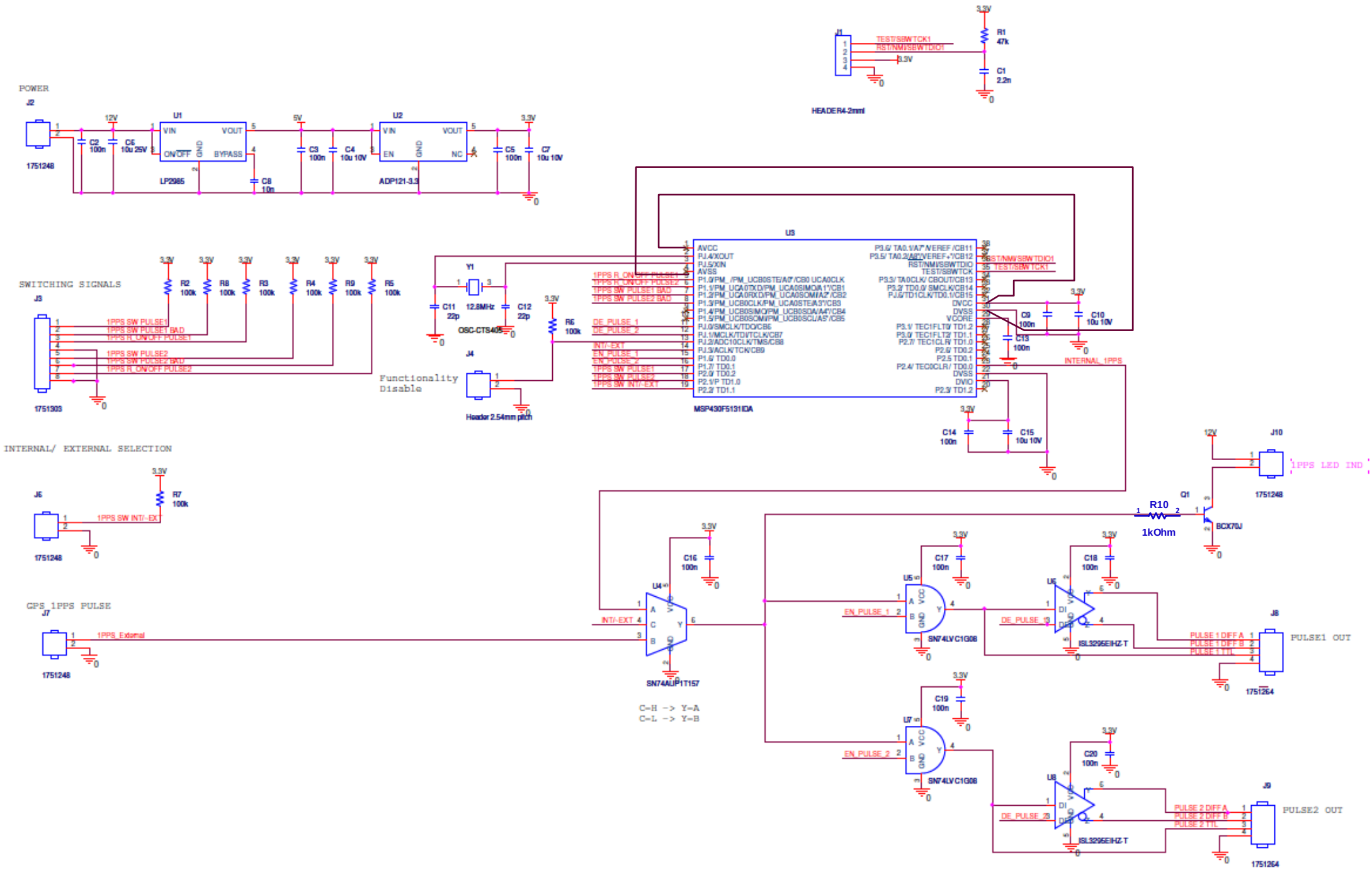
POWER
J2
1751248
12V
C2 100n
C6 10u 25V
U1
VIN
VOUT
ON/OFF
GND
BYPASS
LP2985
C8 10n
5V
C3 100n
C4 10u 10V
U2
VIN
VOUT
EN
GND
NC
ADP121-3.3
3.3V
C5 100n
C7 10u 10V
J1
TEST/SBWTCK1
RST/NMI/SBWTDIO1
HEADER4-2mm
R1 47k
C1 2.2n
SWITCHING SIGNALS
J3
1751303
R2 100k
R8 100k
R3 100k
R4 100k
R9 100k
R5 100k
1PPS SW PULSE1
1PPS SW PULSE1 BAD
1PPS R_ON/OFF PULSE1
1PPS SW PULSE2
1PPS SW PULSE2 BAD
1PPS R_ON/OFF PULSE2
Y1
12.8MHz
C11 22p
C12 22p
OSC-CTS405
R6 100k
J4
Header 2.54mm pitch
Functionality Disable
U3
MSP430F5131IDA
AVCC
PJ.4/XOUT
PJ.5/XIN
AVSS
P1.0/PM_/PM_UCB0STE/A0/ /CB0 UCA0CLK
P1.1/PM_UCA0TXD/PM_UCA0SIMO/A1/ /CB1
P1.2/PM_UCA0RXD/PM_UCA0SOMI/A2/ /CB2
P1.3/PM_UCB0CLK/PM_UCA0STE/A3/ /CB3
P1.4/PM_UCB0SIMO/PM_UCB0SDA/A4/ /CB4
P1.5/PM_UCB0SOMI/PM_UCB0SCL/A5/ /CB5
PJ.0/SMCLK/TDO/CB6
PJ.1/MCLK/TDI/TCLK/CB7
PJ.2/ADC10CLK/TMS/CB8
PJ.3/ACLK/TCK/CB9
P1.6/ TD0.0
P1.7/ TD0.1
P2.0/ TD0.2
P2.1/P TD1.0
P2.2/ TD1.1
P3.6/ TA0.1/A7/ /VEREF /CB11
P3.5/ TA0.2/A6/ /VEREF+/CB12
RST/NMI/SBWTDIO
TEST/SBWTCK
P3.3/ TA0CLK/ CBOUT/CB13
P3.2/ TD0.0/ SMCLK/CB14
PJ.6/TD1CLK/TD0.1/CB15
DVCC
DVSS
VCORE
P3.1/ TEC1FLT0/ TD1.2
P3.0/ TEC1FLT2/ TD1.1
P2.7/ TEC1CLR/ TD1.0
P2.6/ TD0.2
P2.5 TD0.1
P2.4/ TEC0CLR/ TD0.0
DVSS
DVIO
P2.3/ TD1.2
RST/NMI/SBWTDIO1
TEST/SBWTCK1
C9 100n
C10 10u 10V
C13 100n
INTERNAL_1PPS
C14 100n
C15 10u 10V
INTERNAL/ EXTERNAL SELECTION
J6
1751248
R7 100k
1PPS SW INT/-EXT
GPS_1PPS PULSE
J7
1751248
1PPS_External
U4
SN74AUP1T157
INT/-EXT
C16 100n
C=H -> Y=A
C=L -> Y=B
J10
1751248
1PPS LED IND
Q1
BCX70J
R10
1kOhm
U5
SN74LVC1G08
EN_PULSE_1
C17 100n
U6
ISL3295EIHZ-T
DE_PULSE_1
C18 100n
PULSE 1 DIFF A
PULSE 1 DIFF B
PULSE 1 TTL
J8
1751264
PULSE1 OUT
U7
SN74LVC1G08
EN_PULSE_2
C19 100n
U8
ISL3295EIHZ-T
DE_PULSE_2
C20 100n
PULSE 2 DIFF A
PULSE 2 DIFF B
PULSE 2 TTL
J9
1751264
PULSE2 OUT