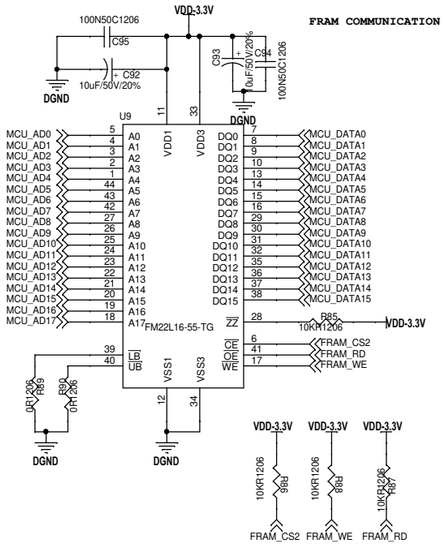

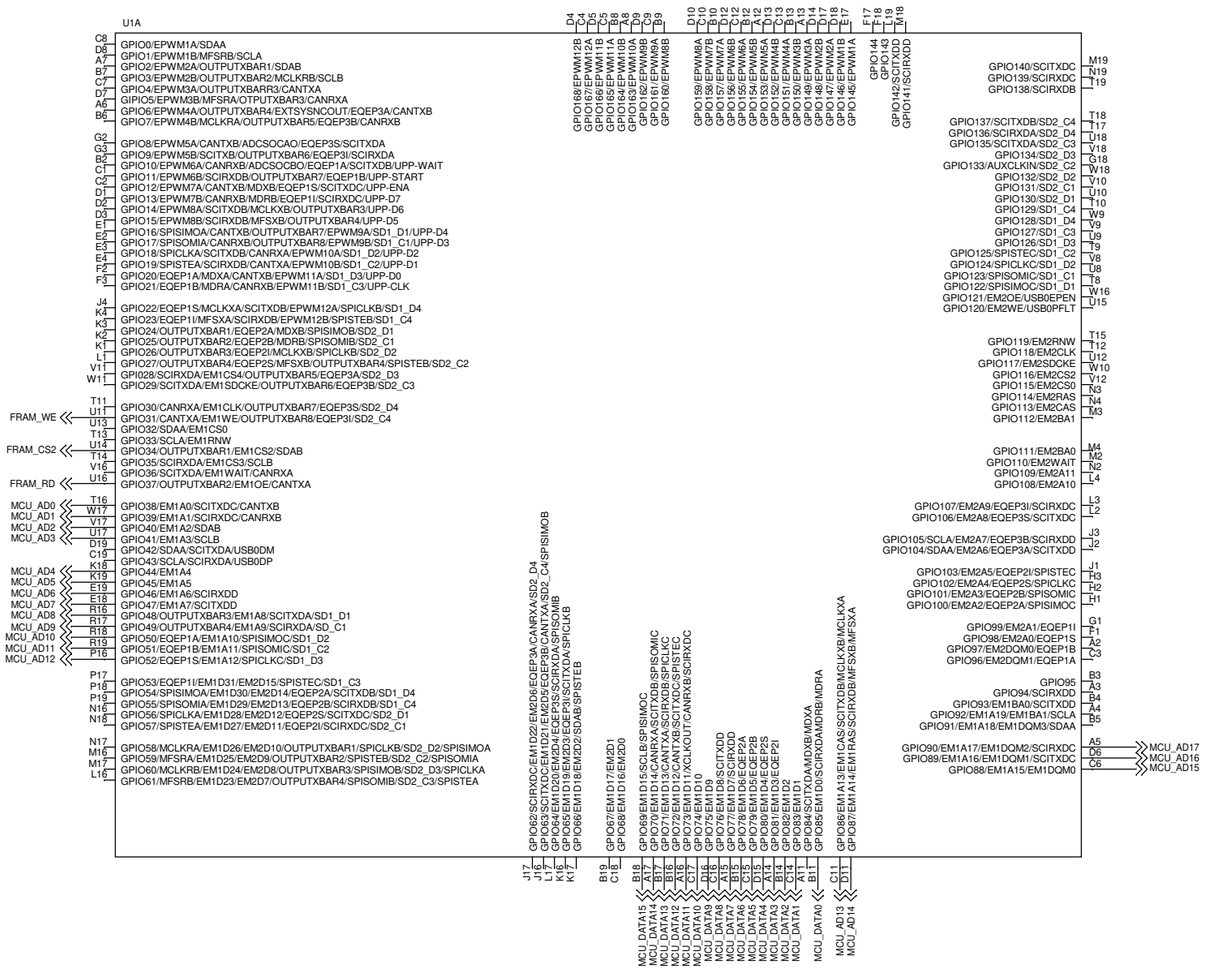

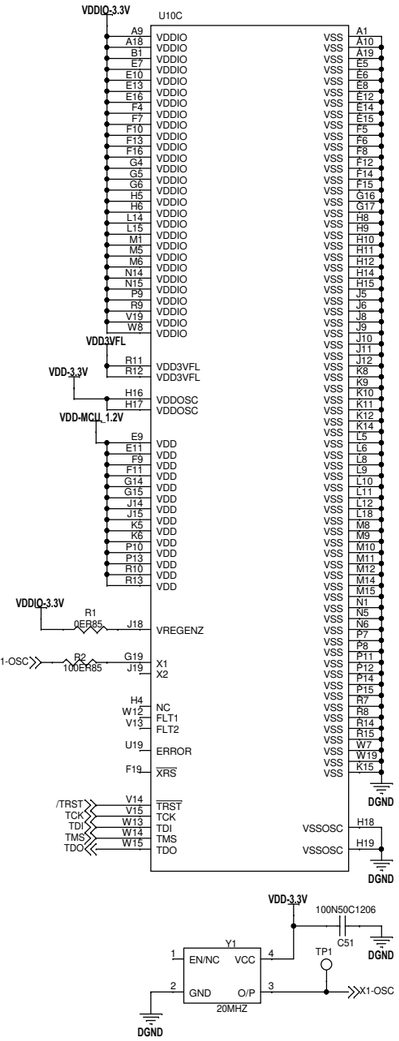

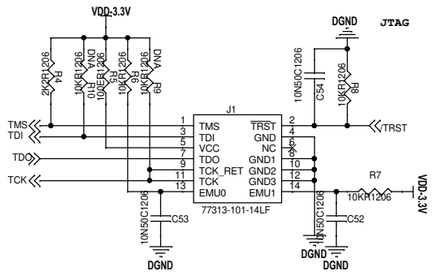

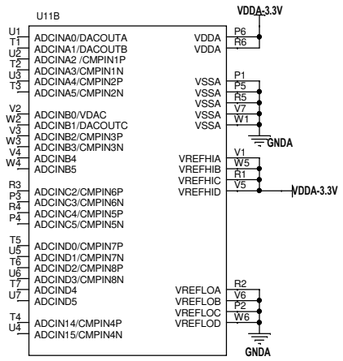

MV Electrosystems Ltd.	SCHEMATIC :-
	PCB :- / REV :-
	PROJECT :-
DESIGNED BY :- IRSHAD SAIFI	SIZE :-
DRAWN BY :- IRSHAD SAIFI	DATE :-
APPROVED BY :-	SHEET NO :-