25 Mhz PROCESSOR/ETHERNET/ETHERCAT

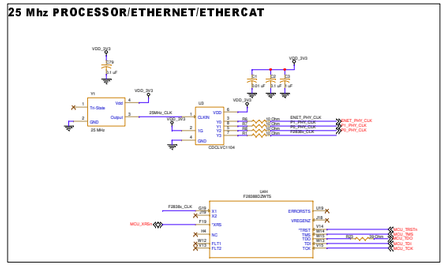

ETHERNET

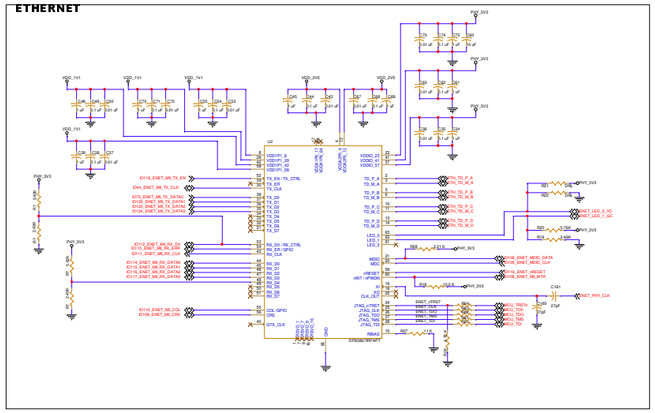

ETHERNET

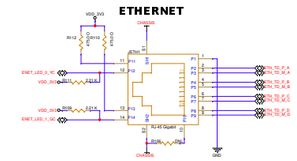

CONNECTOR W/ BUILT-IN MAGNETICS

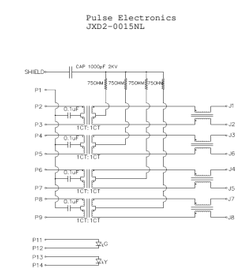

Same connector used on all three.

ETHERCAT_IN

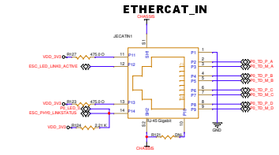

FROM POWER SUPPLY

Voltages	Measured
5	5.004
3.3	3.326
2.5	2.479
1.2	1.199
1.1	1.096

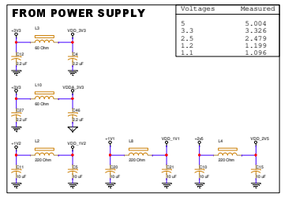

ETHERCAT EEPROM

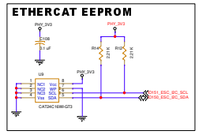

ETHERCAT_OUT

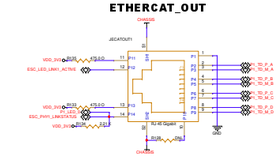

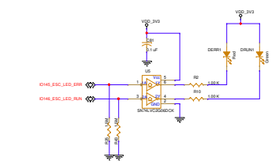

ETHERCAT P0

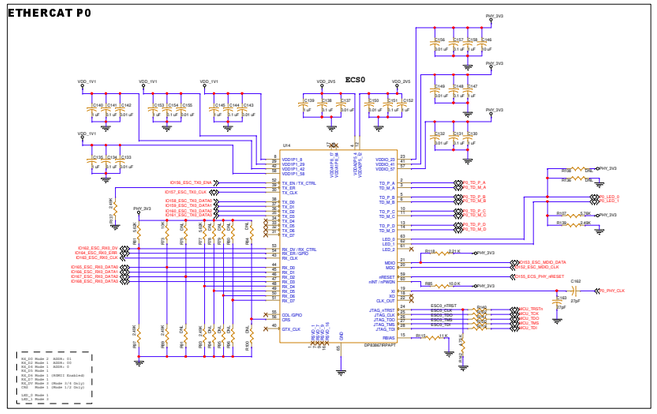
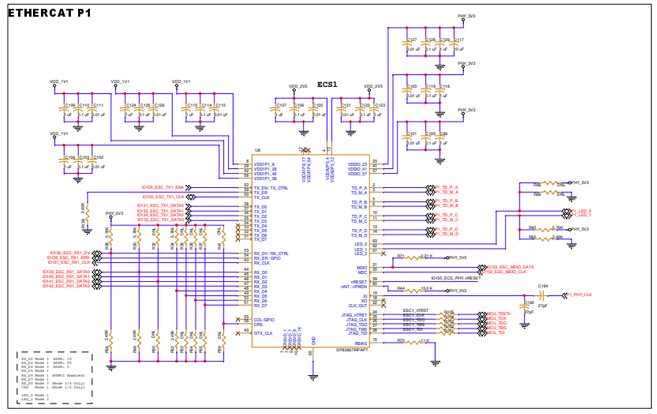
ETHERCAT P1