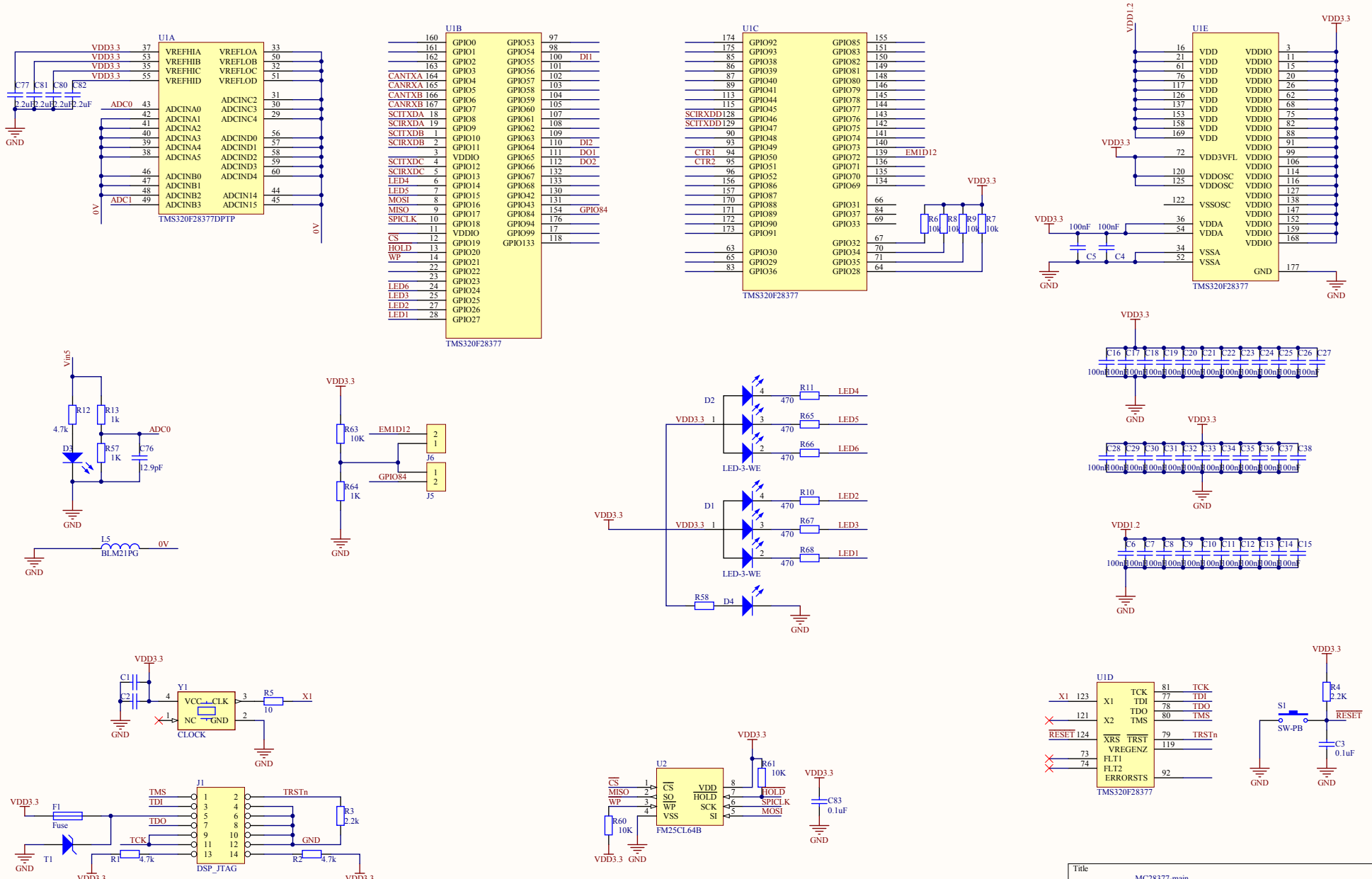
U1A
TMS320F28377DPTP
U1B
TMS320F28377
U1C
TMS320F28377
U1E
TMS320F28377
U1D
TMS320F28377
U2
FM25CL64B
Y1
CLOCK
J1
DSP_JTAG
J5
J6
LED-3-WE
VDD3.3
VDD1.2
GND
0V
Title
MC28377-main
Size
A3
Number
1
Revision
V1.0
Date: 2017/6/14
Sheet of
Drawn By: Zhang Jinfeng