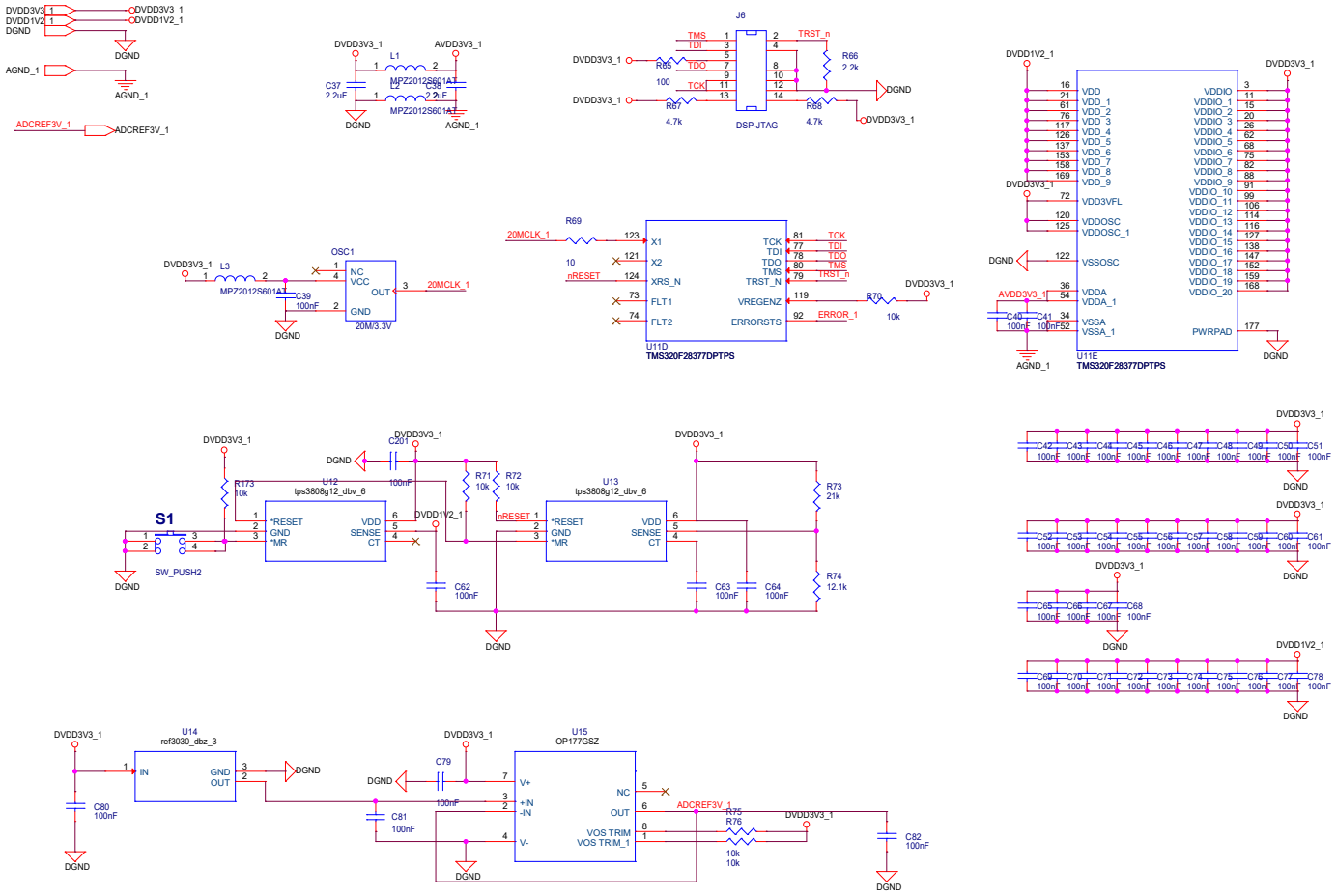

Title		
	<Title>	
Size C	Document Number <Doc>	Rev <RevCode>
Date: Wednesday, November 21, 2018	Sheet 8 of 16	