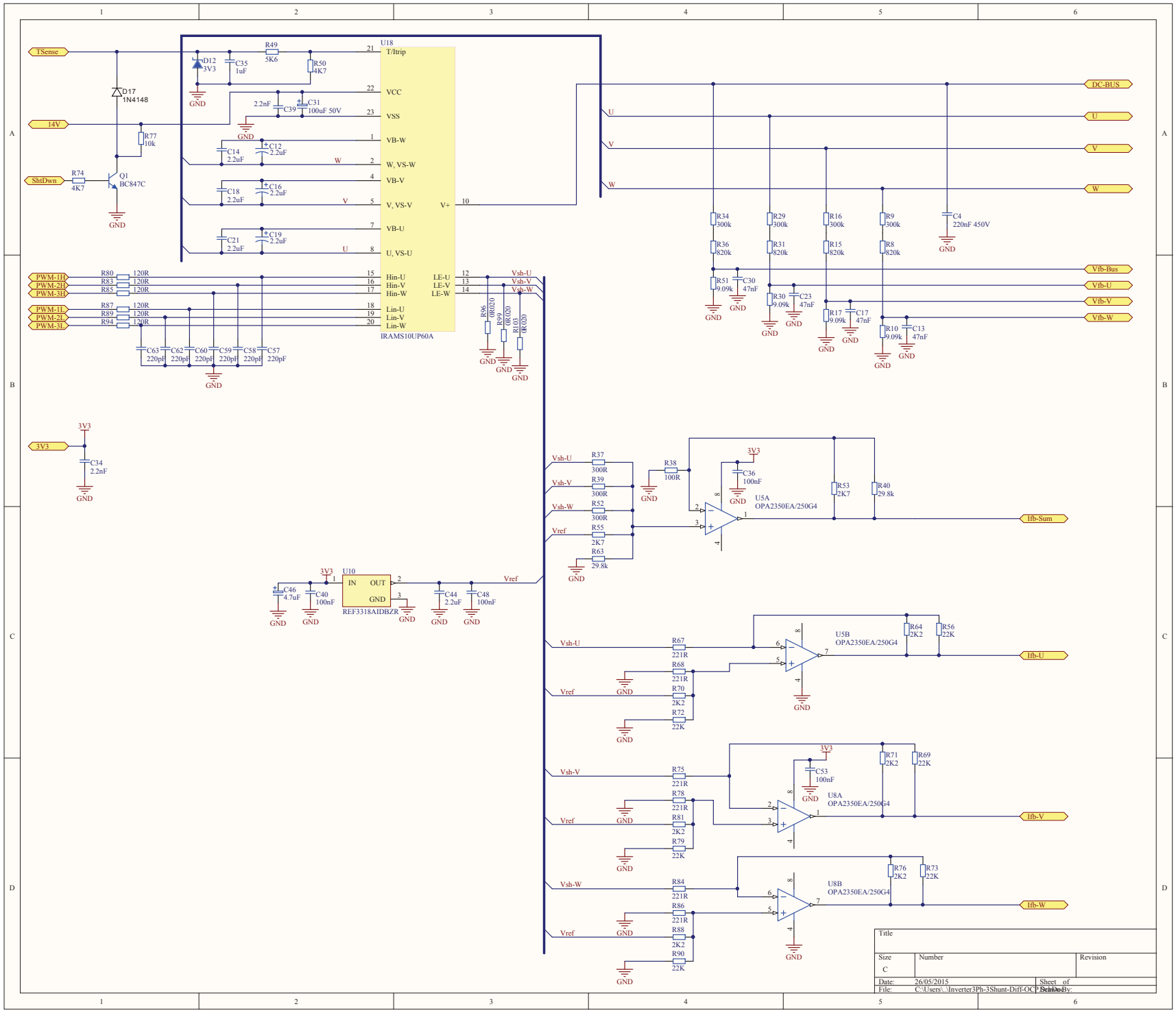
U18
IRAMS10UP60A
T/Itrip
VCC
VSS
VB-W
W, VS-W
VB-V
V, VS-V
VB-U
U, VS-U
V+
Hin-U
Hin-V
Hin-W
Lin-U
Lin-V
Lin-W
LE-U
LE-V
LE-W
TSense
14V
ShtDwn
PWM-1H
PWM-2H
PWM-3H
PWM-1L
PWM-2L
PWM-3L
3V3
GND
DC-BUS
U
V
W
Vfb-Bus
Vfb-U
Vfb-V
Vfb-W
Vsh-U
Vsh-V
Vsh-W
Vref
Ifb-Sum
Ifb-U
Ifb-V
Ifb-W
U5A
OPA2350EA/250G4
U5B
OPA2350EA/250G4
U8A
OPA2350EA/250G4
U8B
OPA2350EA/250G4
U10
REF3318AIDBZR
IN
OUT
Title
Size
C
Number
Revision
Date: 26/05/2015
Sheet of
File: C:\Users\..\Inverter3Ph-3Shunt-Diff-OCP.SchDoc
Drawn By: