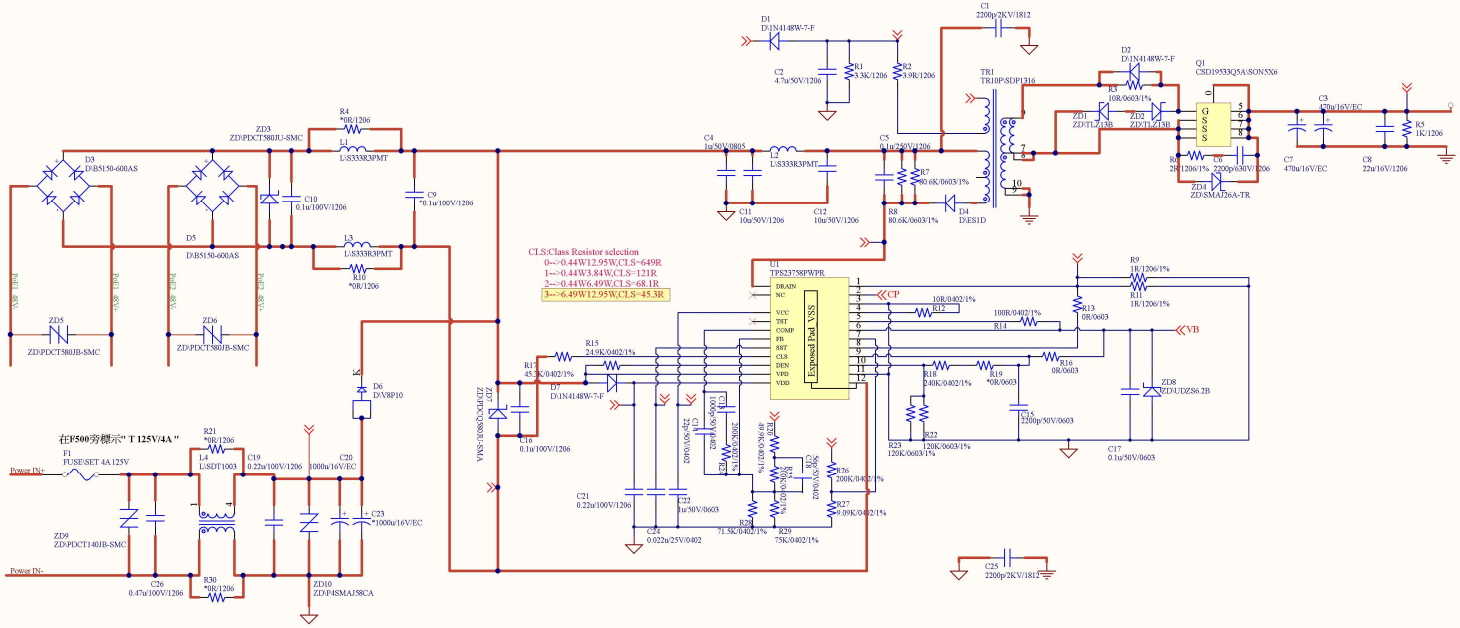

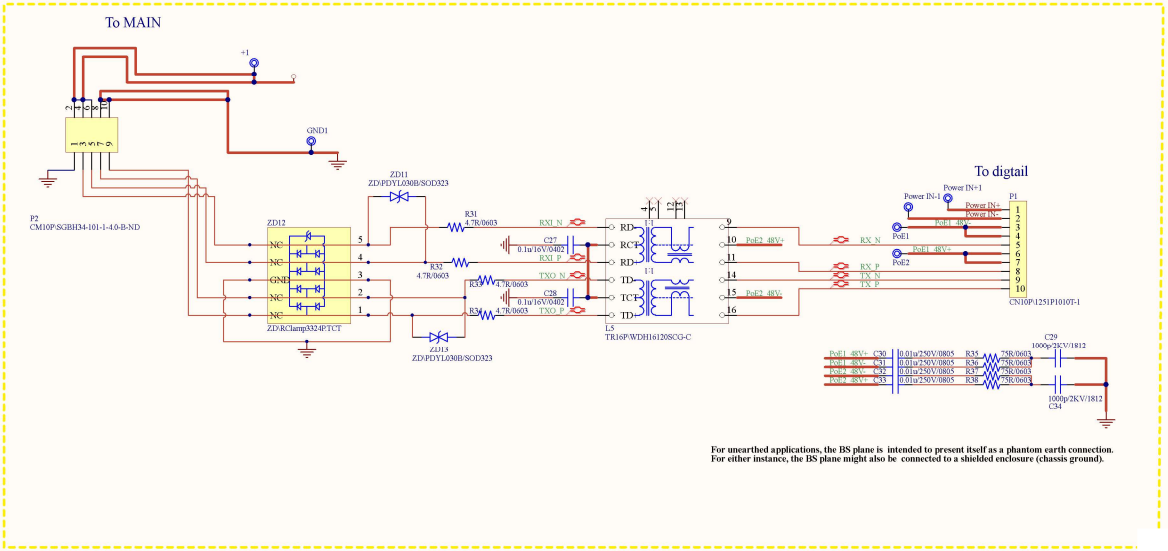

For unearthed applications, the BS plane is intended to present itself as a phantom earth connection.
For either instance, the BS plane might also be connected to a shielded enclosure (chassis ground).