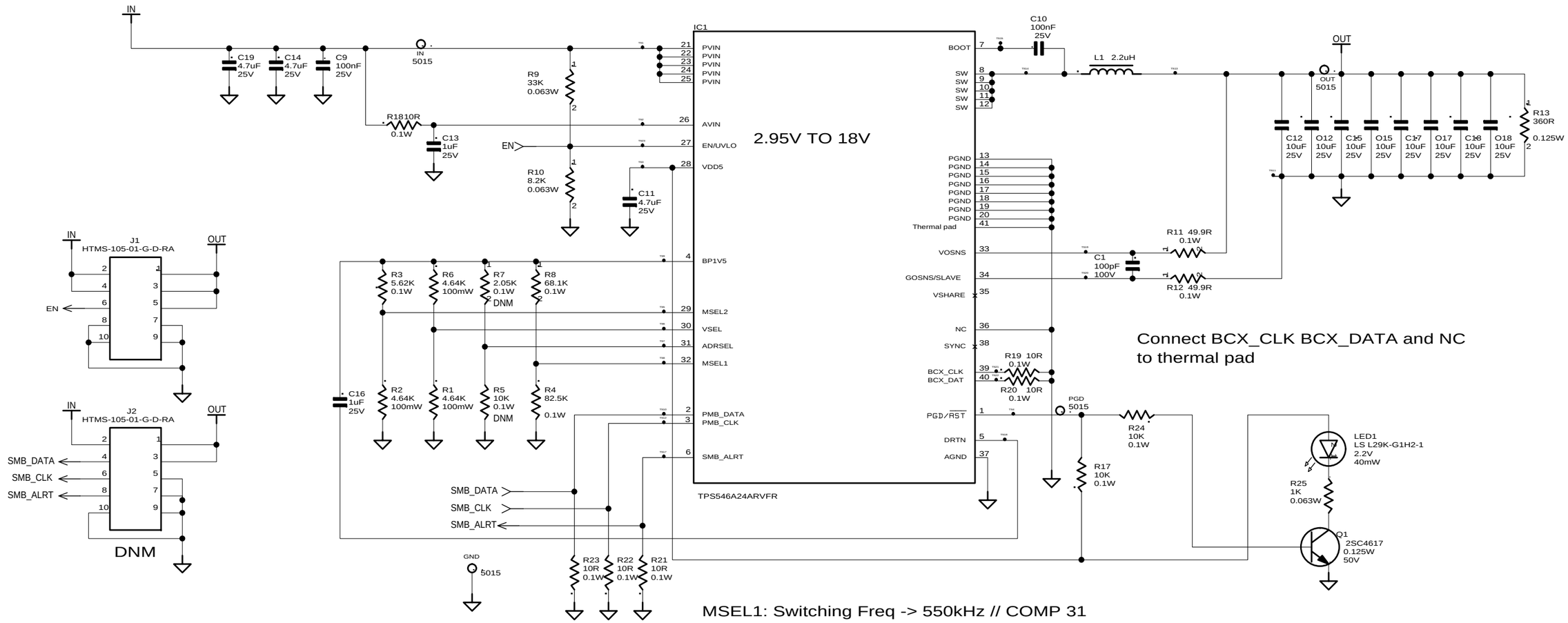


Connect BCX_CLK BCX_DATA and NC to thermal pad

MSEL1: Switching Freq -> 550kHz // COMP 31
MSEL2: Soft Start -> 10ms
VSEL: 1.8V
ADRSEL: Sync autodetect / phase shift 0 / 0x24

EN/UVLO: 6V

| REV | MODIF | DESS | DATE | CONTR | DATE |
|---|---|---|---|---|---|
| REV0 | ORG-EDT | YN | 07/2021 | | |

SYNERGIE CAD
ZI 1ere Av 2eme Rue
BP423
06515 CARROS CEDEX1
TEL : 33 (0) 4 93 08 25 25
FAX : 33 (0) 4 93 29 13 98

BUCK CONVERTER 1.8V

DAUGHTER CARD

SCHEMATIC

DESIGNER : YN
DATE : 07/2021

CONTROLLER :
DATE :

SCH 0058370 IND A PAGE 1/1

THIS DOCUMENT CONTAINS INFORMATION WHICH IS THE CONFIDENTIAL PROPERTY OF SYNERGIE CAD. THIS DOCUMENT IS RECEIVED IN CONFIDENCE AND ITS CONTENTS MAY NOT BE DISCLOSED WITHOUT THE PRIOR WRITTEN CONSENT OF SYNERGIE CAD.