REVISION HISTORY				
REV	DESCRIPTION	DATE	DFTR	CHKR
A	ADD USB + 5V SUPPLY	03/18	CMA	KDS
B	UPDATE PS1,2,3	04/18	CMA	KDS
C	ADD CHARGER SERIES DIODES	05/18	CMA	KDS
C1	UPGRADE Q12,16,17,18,19,23	01/19	CMA	KDS
D	DISCONNECT PS1, PS2 PIN3	04/19	CMA	KDS
D1	REPL R64 W 10V ZENER	06/19	CMA	KDS
D2	ADD RNOTEB	07/19	CMA	KDS
E	RENMBR, CHG L7, ADD C37 C43,J7,Q2,Q3,R17,R21,U5,U6	03/20	CMA	KDS

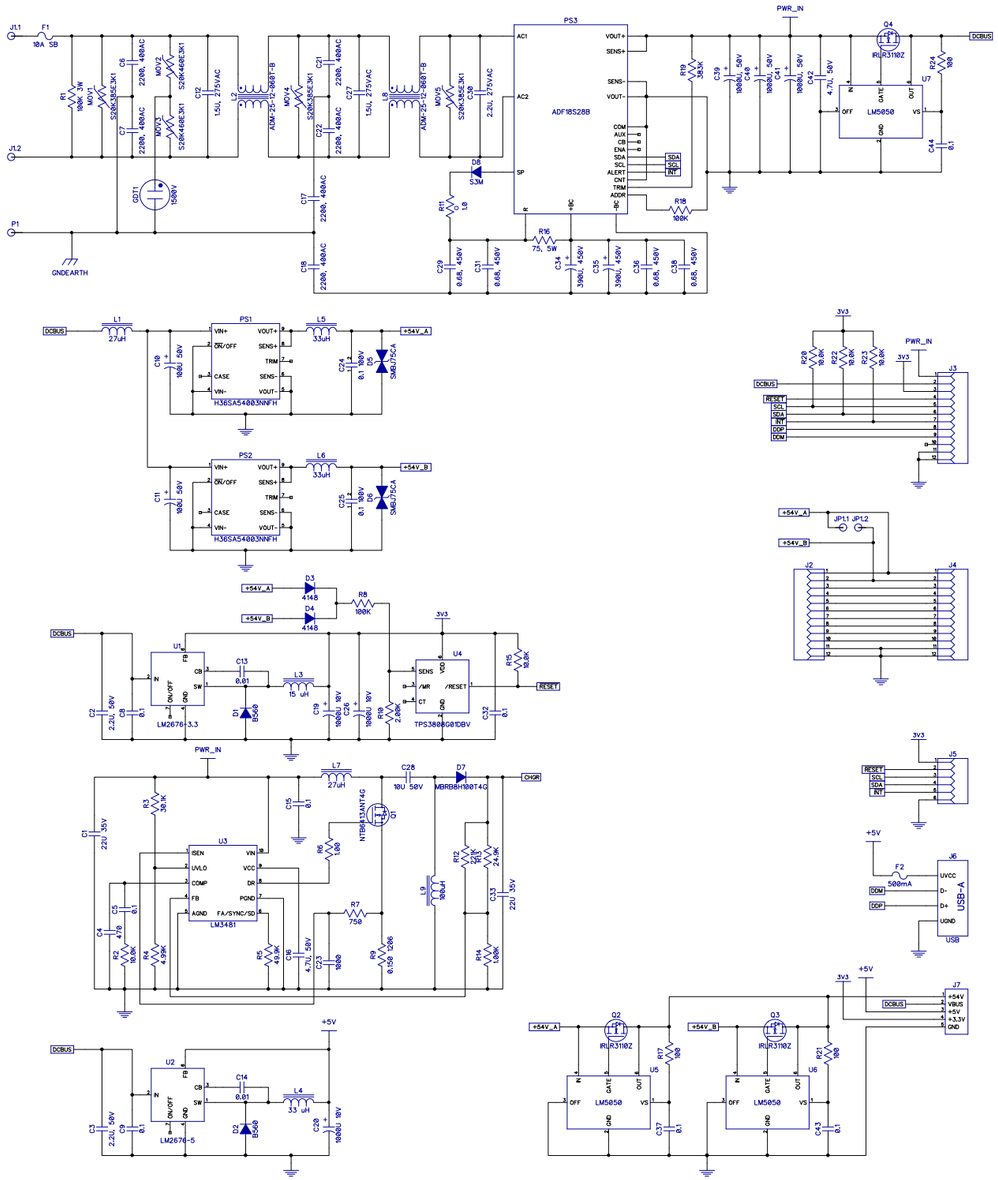

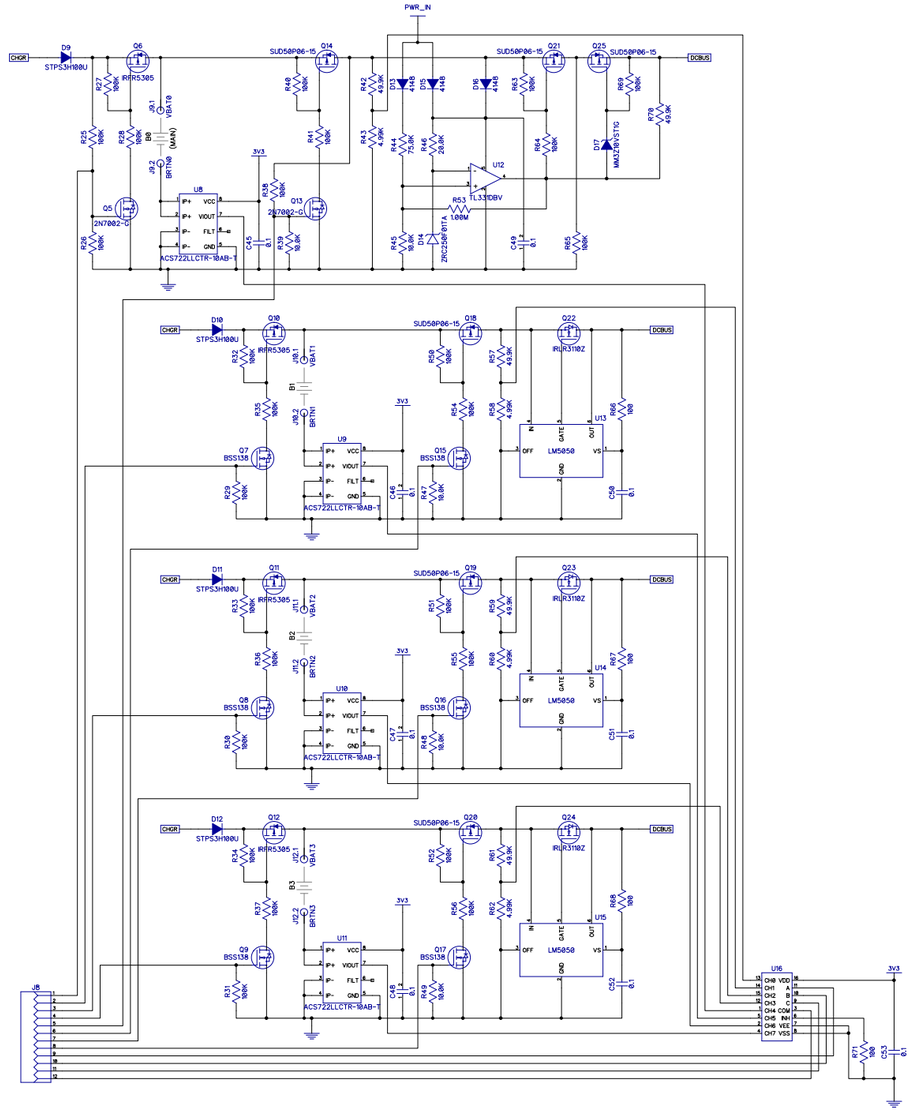

PROPRIETARY AND TRADE SECRET INFORMATION. ANY USE OR REPRODUCTION OF THIS DOCUMENT, IN PART OR IN WHOLE, WITHOUT PRIOR EXPRESS PERMISSION OF BTU RESEARCH IS PROHIBITED

BTU RESEARCH

Title: SCH, PWB, MAIN, SOLIDSWITCH

SIGNATURES		DATE
Author	McAndrew	08/25/2017
Checked	Swatzel	08/25/2017
Engineering	McAndrew	08/25/2017
Approved	Kanarellis	08/25/2017

Size	Number	Rev
D	01010S	E

Date	03/20/2020	Drawn By	McAndrew
Filename	01010SE.dch	Sheet	1 of 1