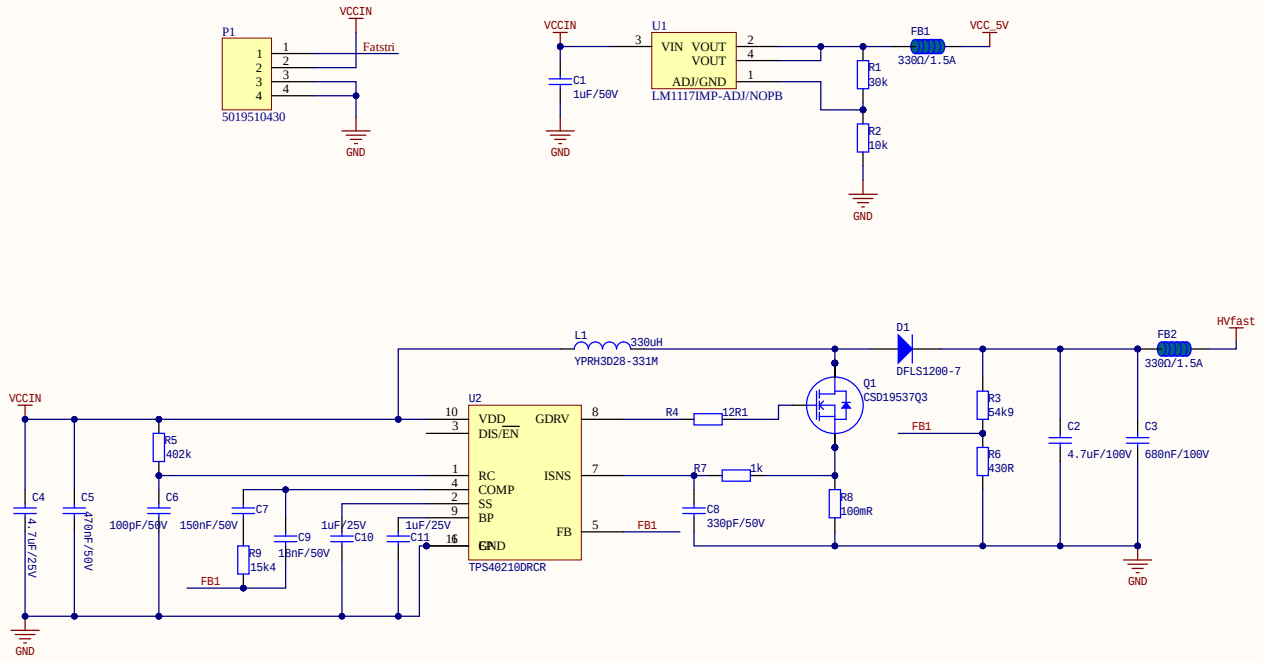
P1
5019510430
VCCIN
Fatstri
GND
U1
LM1117IMP-ADJ/NOPB
VIN
VOUT
VOUT
ADJ/GND
C1
1uF/50V
R1
30k
R2
10k
FB1
330Ω/1.5A
VCC_5V
L1
330uH
YPRH3D28-331M
D1
DFLS1200-7
Q1
CSD19537Q3
FB2
330Ω/1.5A
HVfast
U2
TPS40210DRCR
VDD
DIS/EN
GDRV
RC
COMP
SS
BP
ISNS
FB
GND
R4
12R1
R7
1k
C8
330pF/50V
R8
100mR
R3
54k9
R6
430R
C2
4.7uF/100V
C3
680nF/100V
R5
402k
C4
4.7uF/25V
C5
470nF/50V
C6
100pF/50V
C7
150nF/50V
R9
15k4
C9
18nF/50V
C10
1uF/25V
C11
1uF/25V