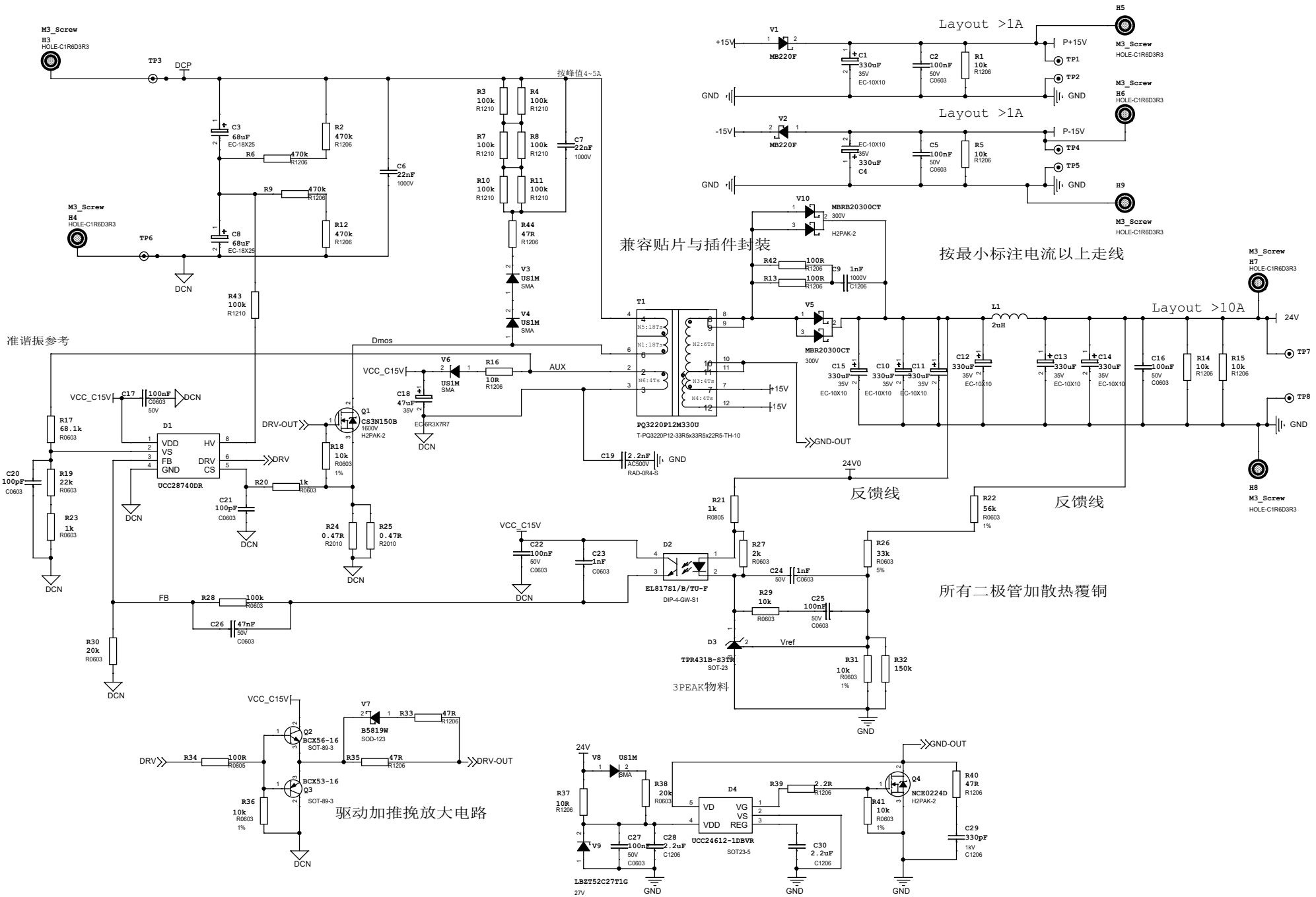

<Variant Name>			
Project:	PWR-72W24V_00		
File:	01_Power		
Date:	Monday, January 13, 2025	Rev:	1.0
Designed by:	Liw	Page Size: A3	Sheet: 2 of 2