PFC

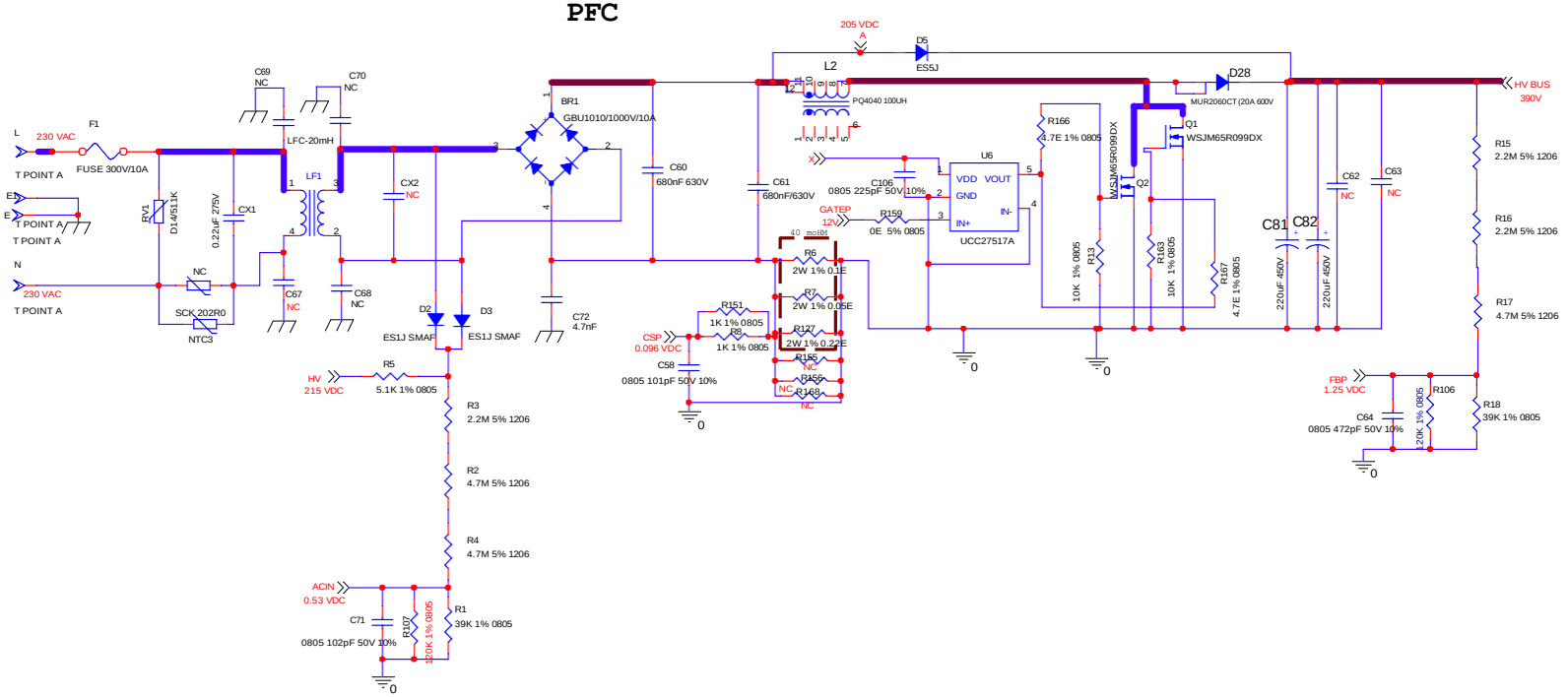

Tiitlfile <Tiitlfile>		
Siiize A3	Document Number <Doc>	Rev <Rev
Date: Thursday, May 02, 2024	Sheet 3 of 3	