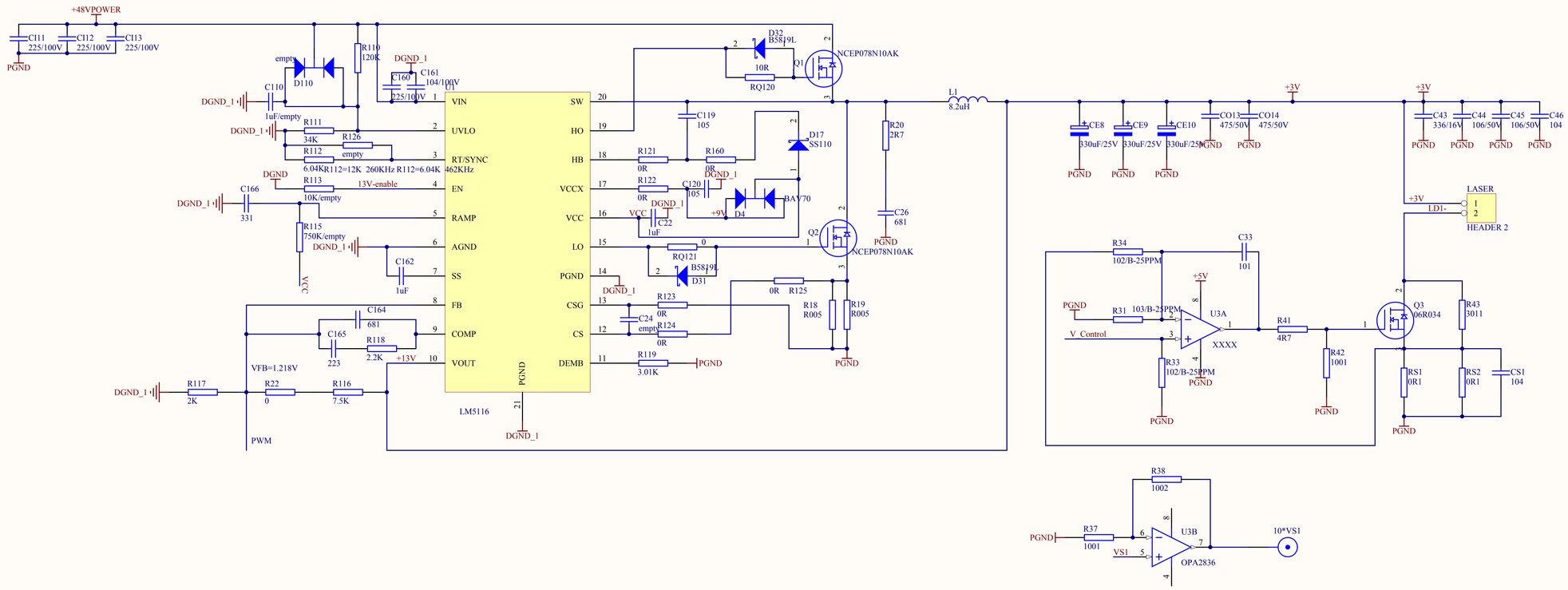


| Title | | |
|---|---|---|
| Size C | Number | Revision |
| Date: 2024/11/21 | Sheet of | |
| File: E:\WORK\..\FLM-1504-001A-POWERV22.DDB | Drawn by: | |