USB C Power Delivery

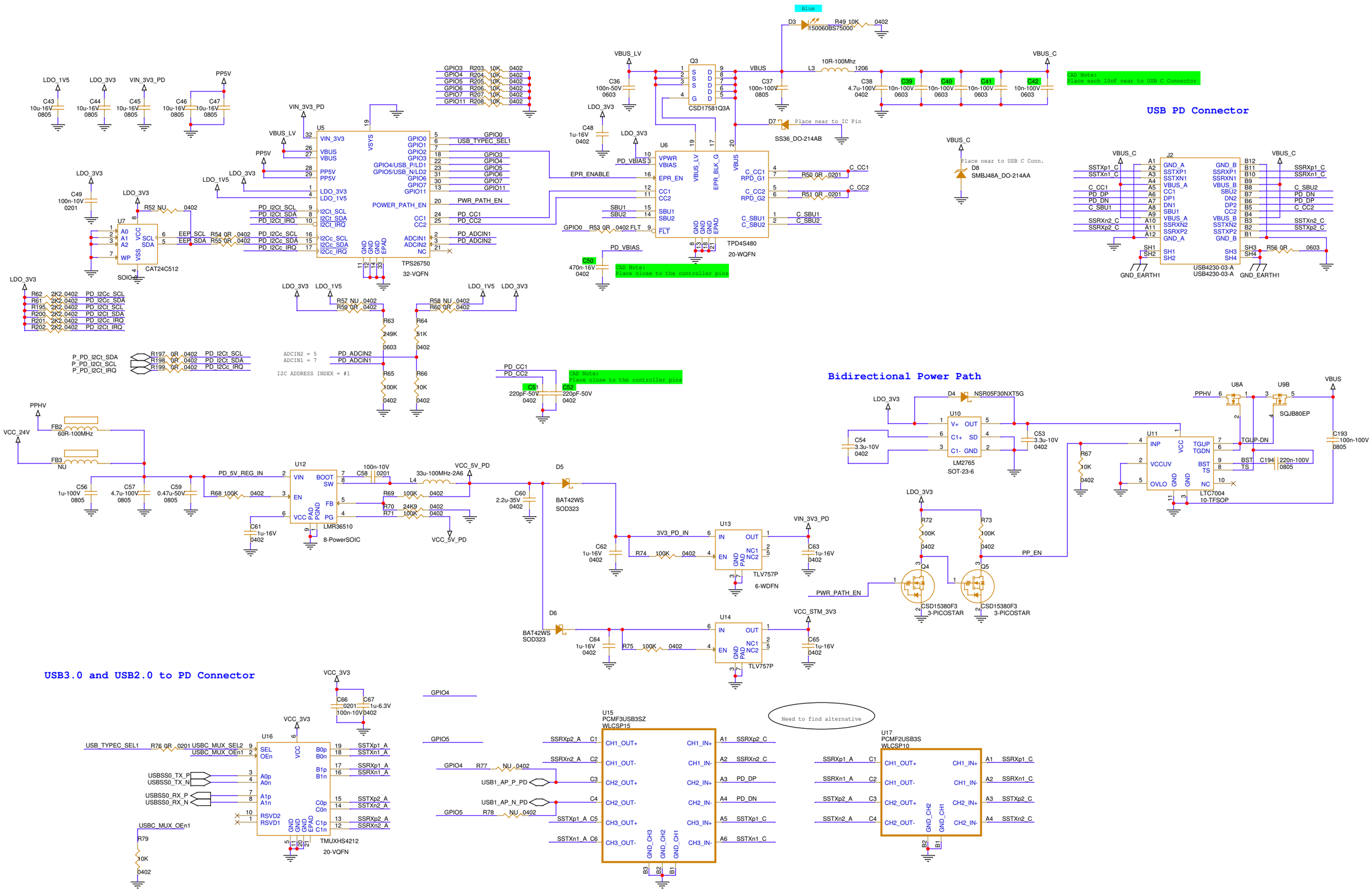

USB PD Connector

Bidirectional Power Path

USB3.0 and USB2.0 to PD Connector