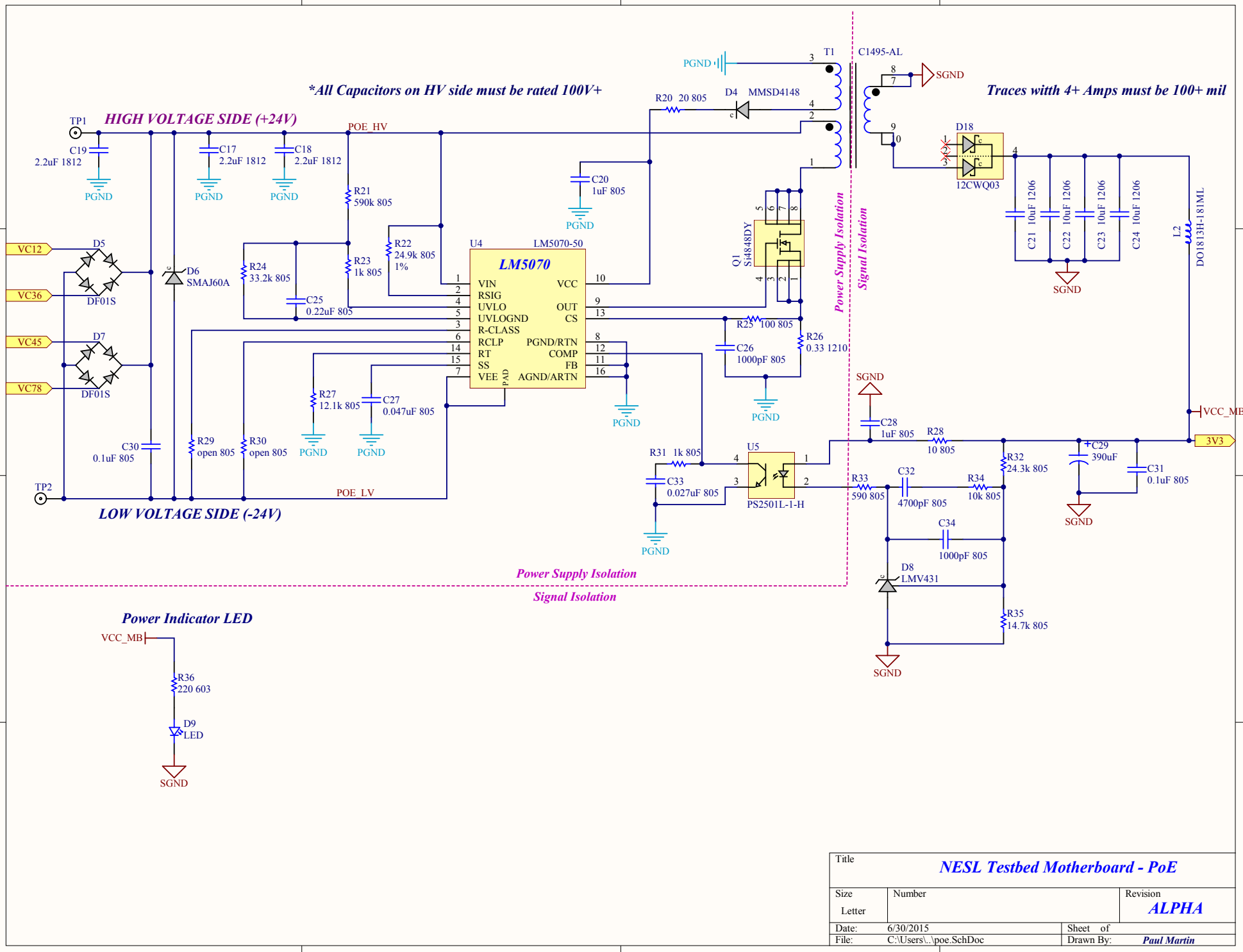

Title	NESL Testbed Motherboard - PoE	
Size Letter	Number	Revision ALPHA
Date: 6/30/2015		Sheet of
File: C:\Users\..\poe.SchDoc		Drawn By: Paul Martin