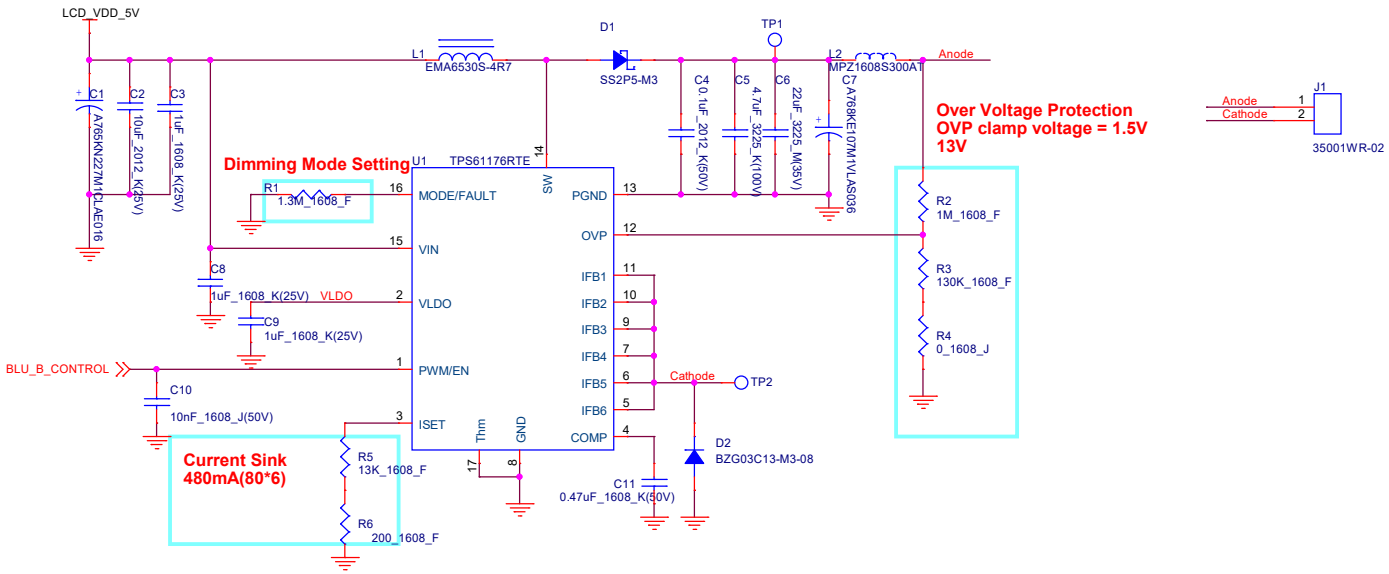

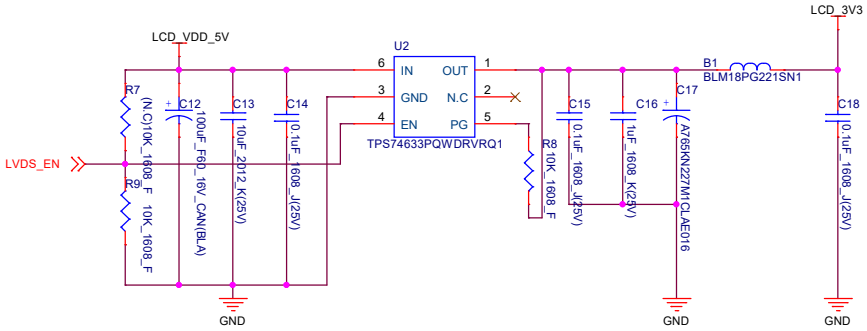

PROJECT *i50*	MEDIANA THIS DOCUMENT MAY NOT BE COPIED. DISCLOSED OR USED IN WHOLE OR IN PART WITHOUT THE CONSENT OF MEDIANA IN CORPORATED.	
Title LCD INTERFACE		
Page Name: POWER	Drafter: 김주영	Date: 2020-09-01
Doc. Number: MDRXXXX##	Checked: 심명현	Page Size: A3
Revision: P0000-0	Checked: -	**R&D Center**
Sheet 2 of 3	Approved: 한상훈	