A

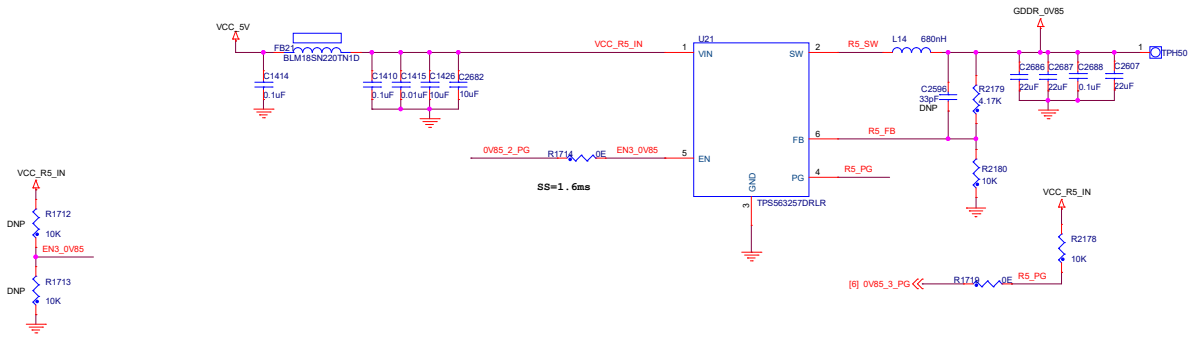

Title	<Title>	
Size A2	Document Number <Doc>	Rev <Rev>
Date: Friday, September 15, 2023	Sheet 1 of 1	