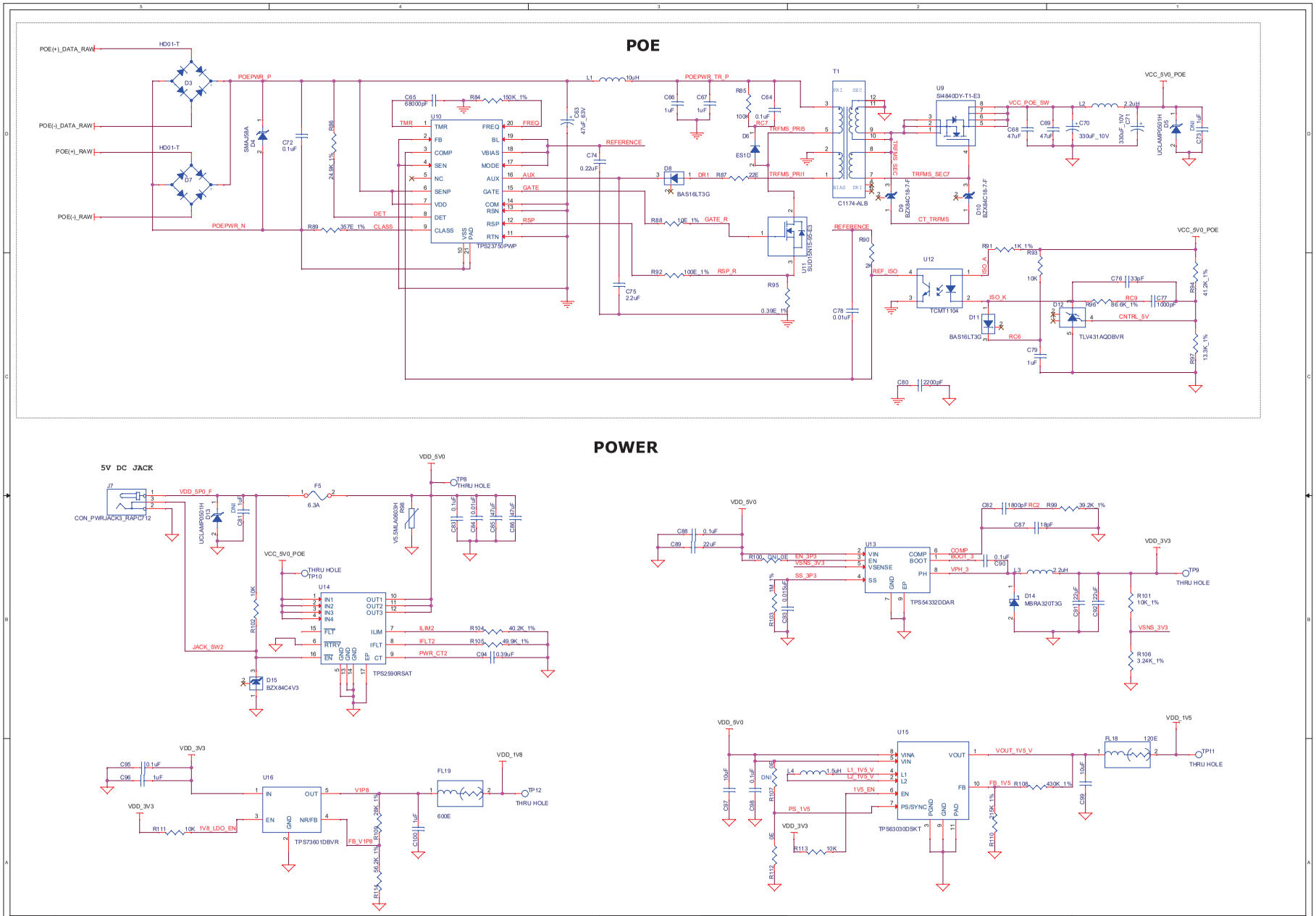

REV NO.	NATURE OF CHANGE	APPROVED BY	DATE

Mistral Solutions [P] Ltd.
#60 Adarsh regent,100 Feet Ring Road, Domlur Extension
Bangalore 560 071, Ph : +91-80-30912600, Fax :+91-80-2535 6444

Drawn by: USHA/SENTHIL
Date: Wednesday, January 18, 2017
Approved by: KANAGESWARAN
Date Thursday, December 28, 2017
Design file path:

Title POWER
Size C
Document Number MS_IM_APPMINI_SCH_REVA
Rev A
Date: Monday, November 27, 2017
Sheet 11 of 11