OK!
10/FEB/2023

LI-ION BATTERY / POLYMER CHARGER (2.5A)

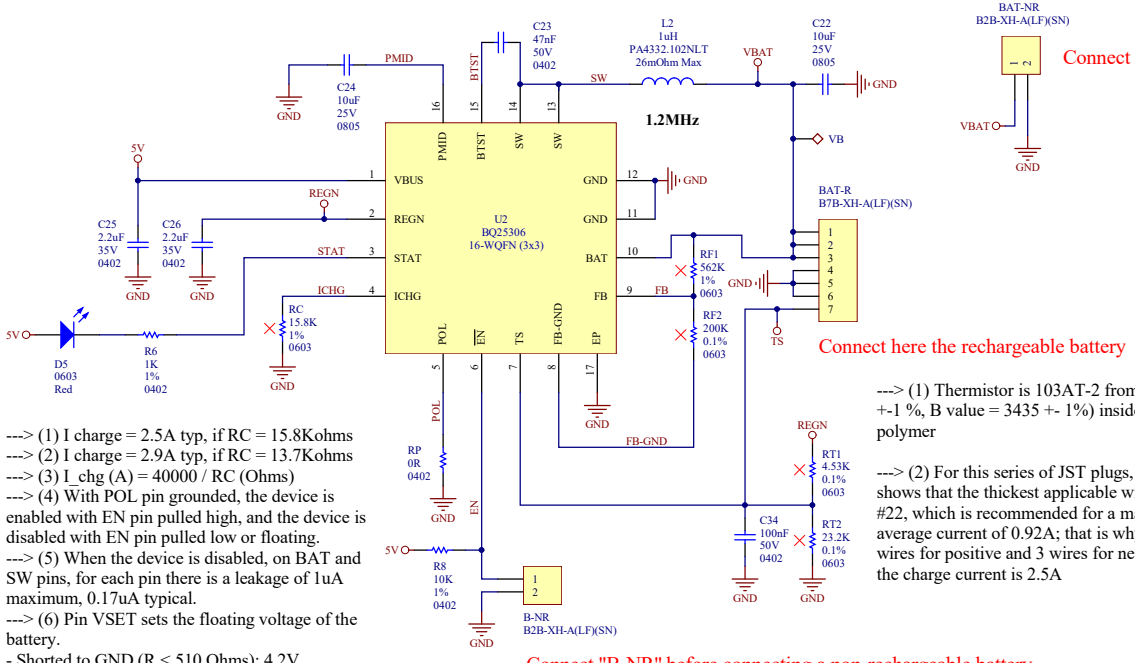

Connect here the non-rechargeable battery

Connect here the rechargeable battery

Connect "B-NR" before connecting a non-rechargeable battery

---> (1) I charge = 2.5A typ, if RC = 15.8Kohms
---> (2) I charge = 2.9A typ, if RC = 13.7Kohms
---> (3) I_chg (A) = 40000 / RC (Ohms)
---> (4) With POL pin grounded, the device is enabled with EN pin pulled high, and the device is disabled with EN pin pulled low or floating.
---> (5) When the device is disabled, on BAT and SW pins, for each pin there is a leakage of 1uA maximum, 0.17uA typical.
---> (6) Pin VSET sets the floating voltage of the battery.
- Shorted to GND (R < 510 Ohms): 4.2V
- Floating (R > 200 kOhms±10%): 4.1V
- R = 51 kOhms ± 10%: 4.35V
- R = 10 kOhms ± 10%: 4.4V

---> (1) Thermistor is 103AT-2 from Semitec (10K +-1 %, B value = 3435 +- 1%) inside the battery / polymer

---> (2) For this series of JST plugs, the datasheet shows that the thickest applicable wire is the AWG #22, which is recommended for a maximum average current of 0.92A; that is why it was used 3 wires for positive and 3 wires for negative, because the charge current is 2.5A

OR'ING

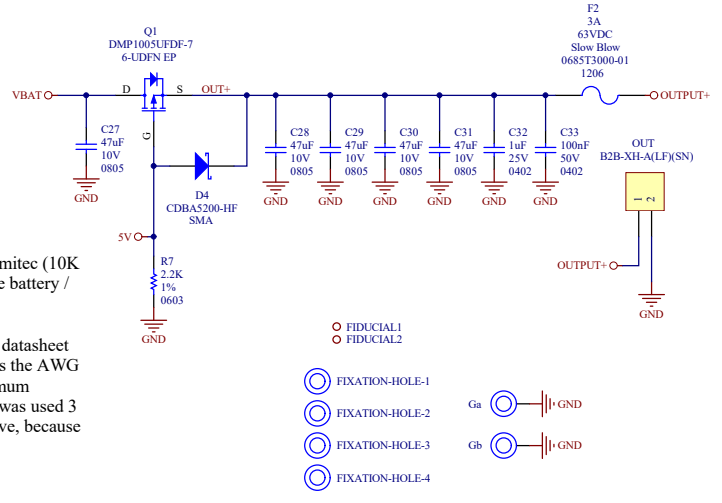

Título: PCB-NB2 - No-Break DC para o Geo, com fonte buck, com carregador mas não MPPT			
SIRROS	Página: 1	Rev. da PCI: B	Rev. do Esquema: A
	Data:	Projetista: Jeferson Pehls	