Network Switch

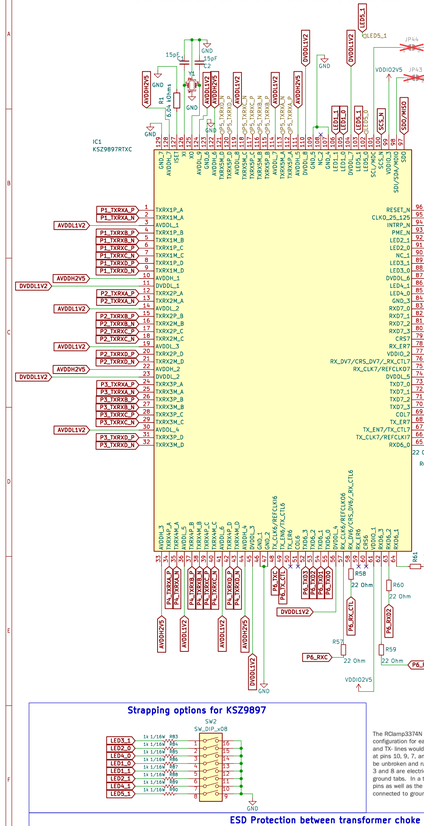

Add jumpers for SPI and other config
Check if unused pins need to be grounded or pulled up
Test points at various locations

TXC must be routed for additional 1.2ns or 1.5ns delay. Or setting bit4 in register 0x6301

Double check Bob-Smith termination and location of resisters

What to do with INTRP_N and PME_N pins

PSE (4 Port)

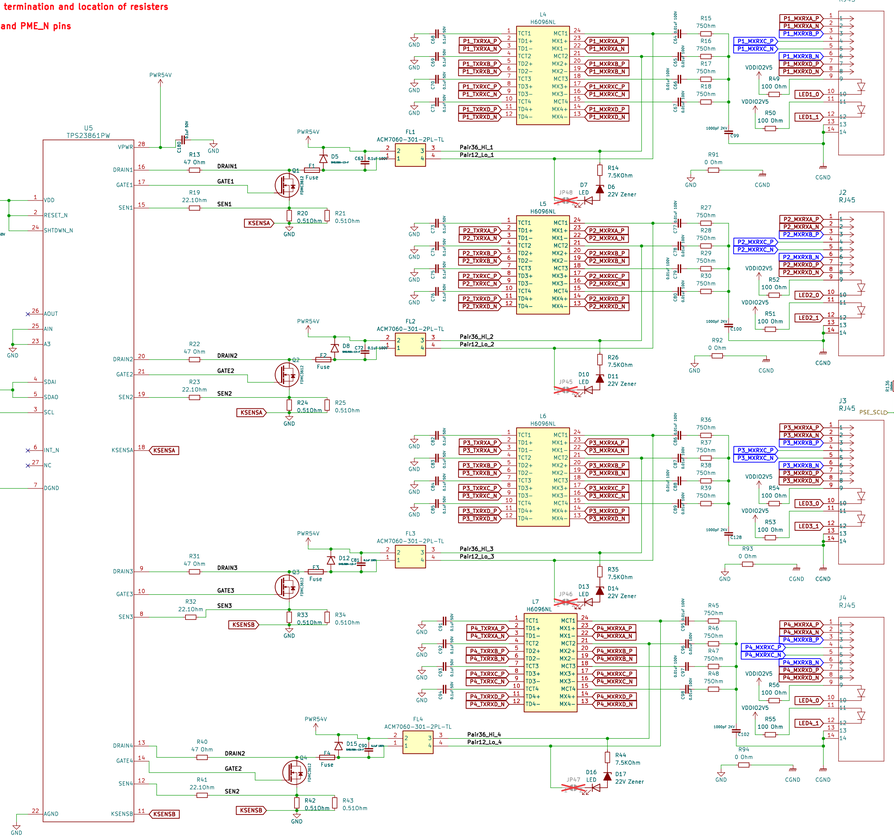

PSE (2 Port)

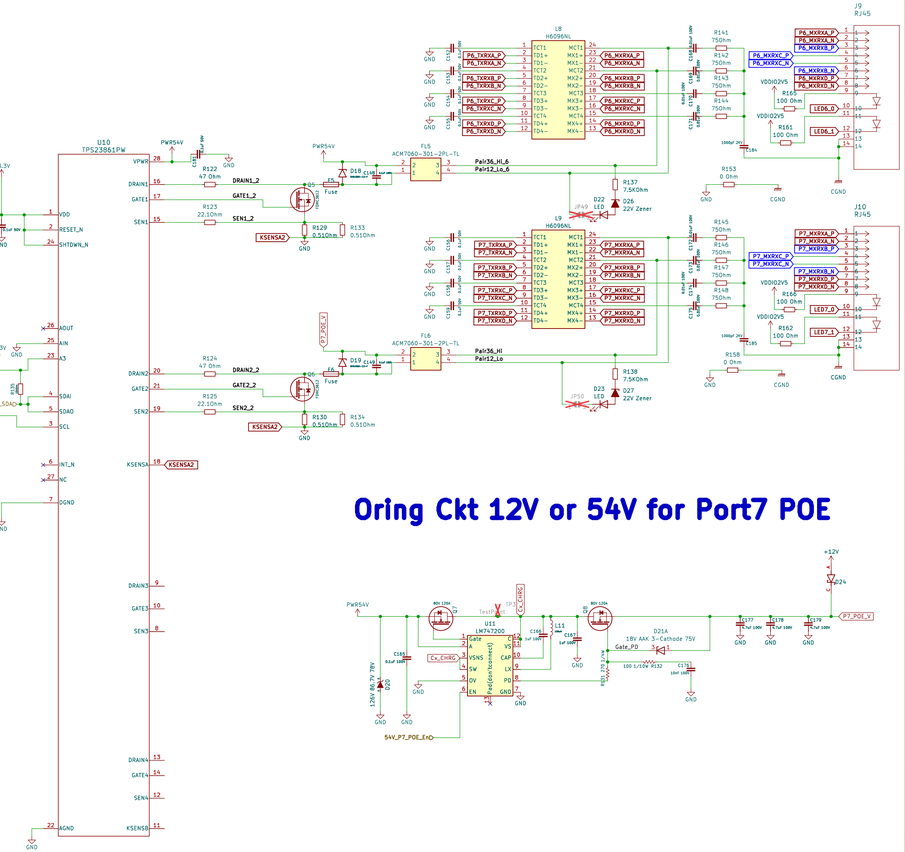

Oring Ckt 12V or 54V for Port7 POE

Strapping options for KSZ9897

The RClamp3374N is designed with a flow through pin configuration for easy layout. In a GbE application, TX+ and TX- lines would enter at pins 1, 2, 4, and 5 and exit at pins 10, 9, 7, and 6 respectively. The traces should be untroken and run under the device as shown. Pins 3 and 8 are electrically connected to the three center ground tabs. In a typical Ethernet application, these pins as well as the tabs should be left floating (i.e. not connected to ground).

Layout Example

ESD Protection between transformer choke and KSZ9897

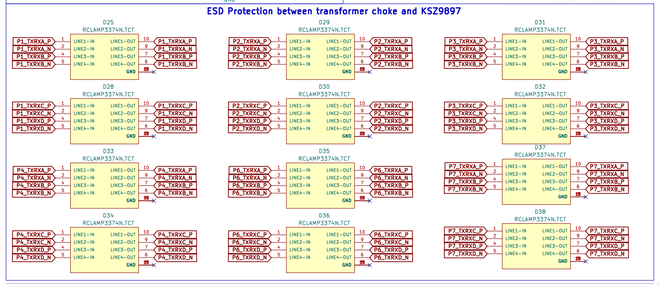

Decoupling Capacitors

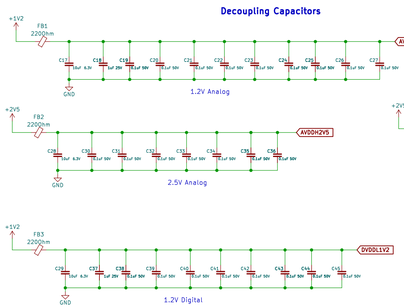

SPI

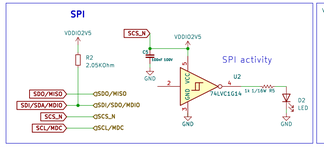

RESET Switch

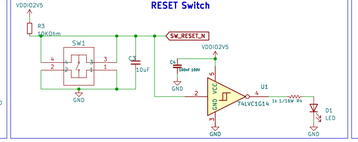

Port6 of KSZ9897 to PHY KSZ9031

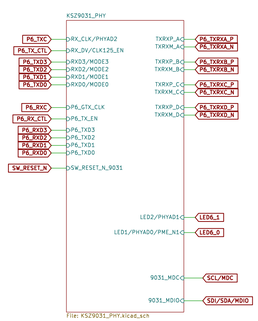

Port7 of KSZ9897 to 2nd PHY KSZ9031

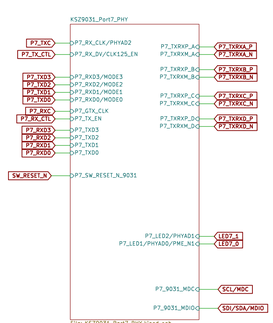

Do both the 9031 PHYs connect to the same SCL/MDC and SDI/SDA/MDIO pins on KSZ9897

Sheet: /NetworkSwitch/
File: network_switch.kicad_sch

Title:

Size: D	Date:	Rev:
KiCad E.D.A. kicad (7.0.0-rc2-228-g37b9b3f3cc)		Id: 4/6