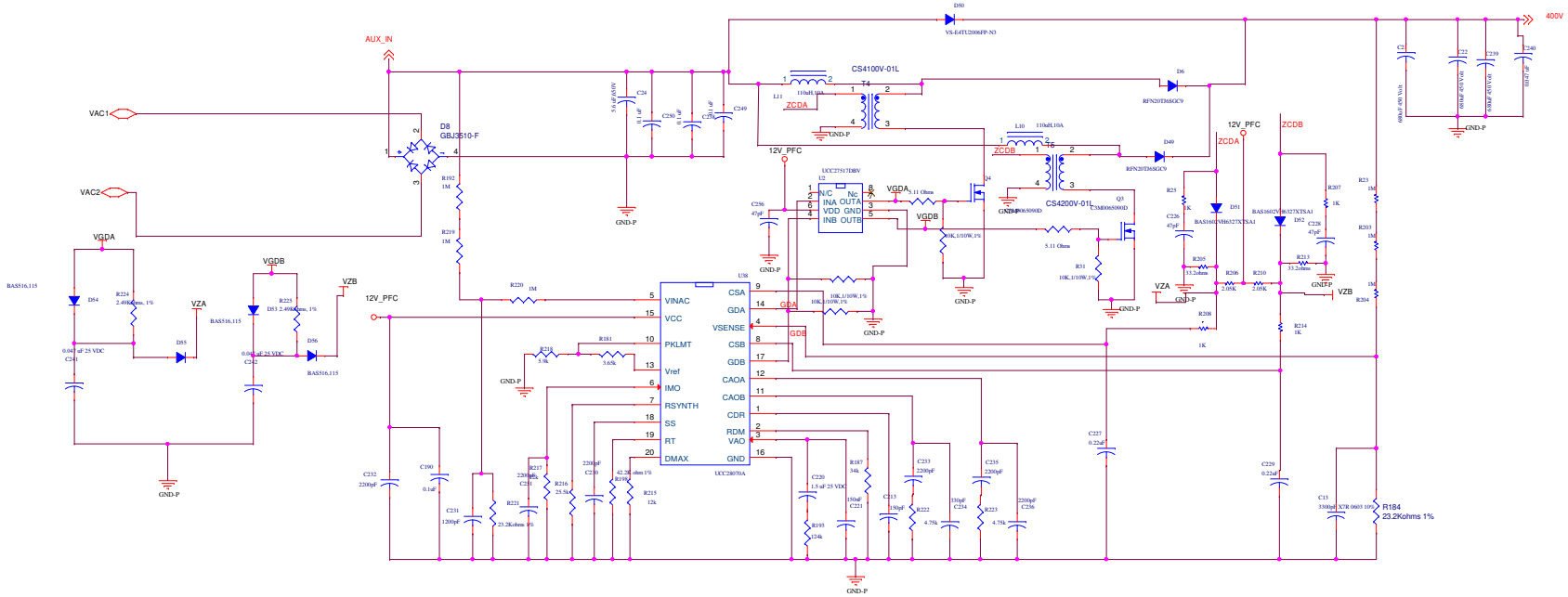

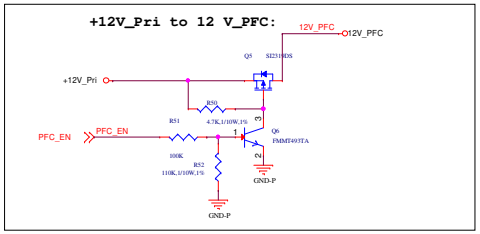

Title	<Title>	
Size C	Document Number <Doc>	Rev <RevCode>
Date: Friday, March 08, 2024	Sheet 1 of 1	