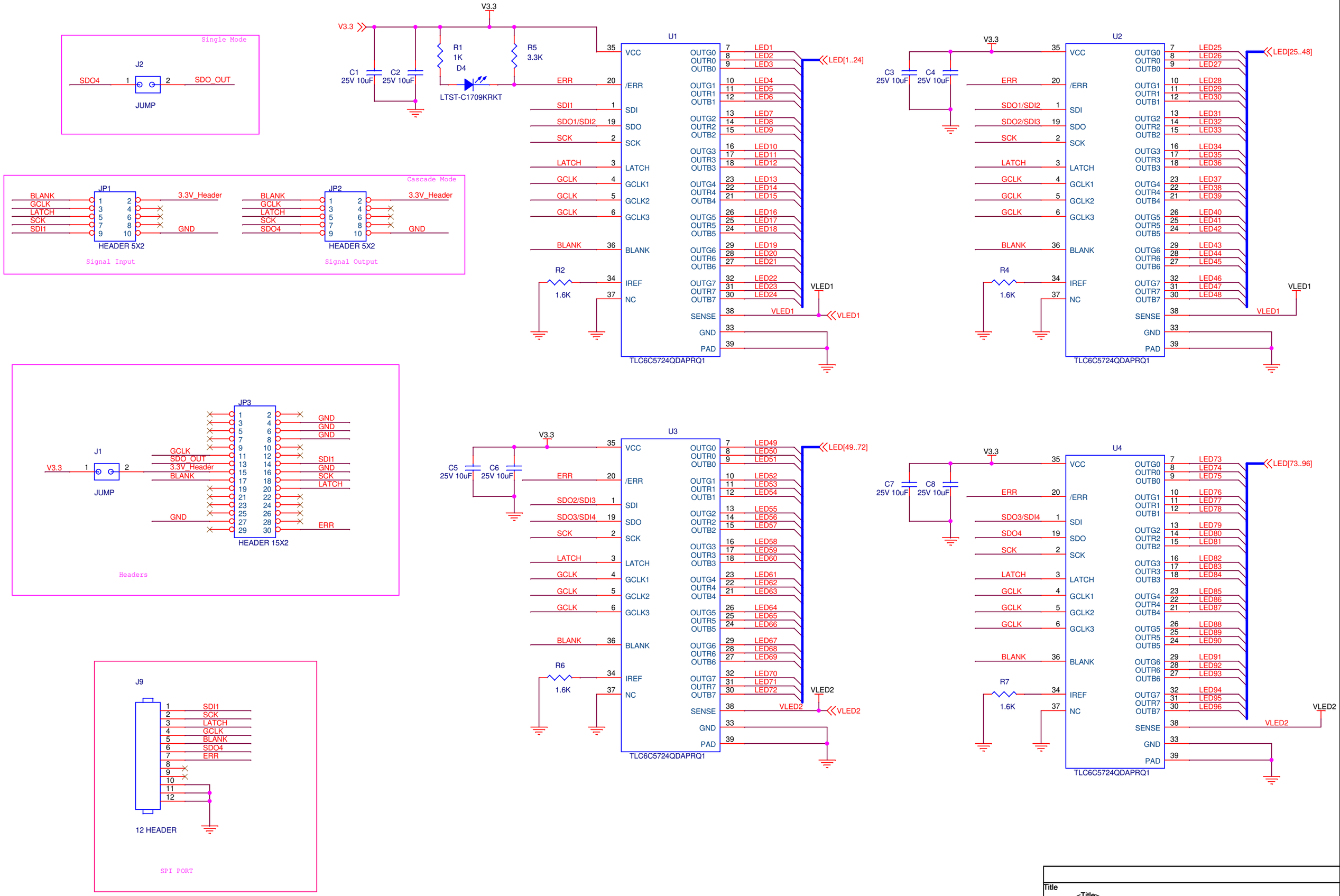
Single Mode
J2
SDO4
SDO_OUT
JUMP
V3.3
C1 25V 10uF
C2 25V 10uF
R1 1K
D4
LTST-C1709KRKT
R5 3.3K
U1
TLC6C5724QDAPRQ1
LED[1..24]
VLED1
Cascade Mode
JP1
HEADER 5X2
Signal Input
JP2
HEADER 5X2
Signal Output
3.3V_Header
GND
BLANK
GCLK
LATCH
SCK
SDI1
SDO4
R2 1.6K
C3 25V 10uF
C4 25V 10uF
U2
LED[25..48]
SDO1/SDI2
SDO2/SDI3
R4 1.6K
JP3
HEADER 15X2
J1
JUMP
SDO_OUT
Headers
C5 25V 10uF
C6 25V 10uF
U3
LED[49..72]
SDO2/SDI3
SDO3/SDI4
R6 1.6K
VLED2
C7 25V 10uF
C8 25V 10uF
U4
LED[73..96]
SDO3/SDI4
SDO4
R7 1.6K
J9
12 HEADER
SPI PORT
Title
<Title>
Size A3
Document Number
<Doc>
Rev
Date: Wednesday, November 07, 2018
Sheet 4 of 4