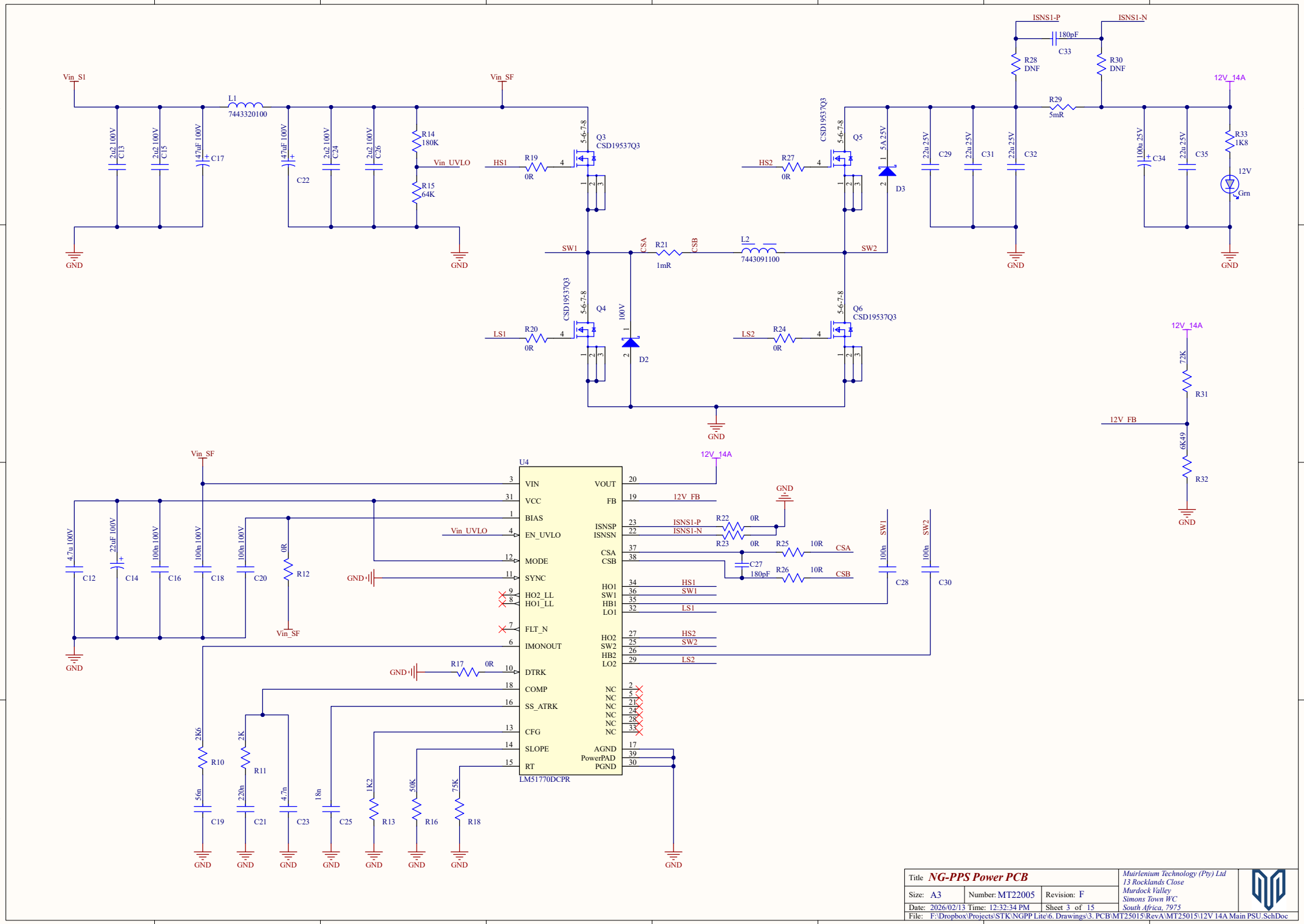

Title	NG-PPS Power PCB		Muirlenium Technology (Pty) Ltd 13 Rocklands Close Murdock Valley Simons Town WC South Africa, 7975
Size: A3	Number: MT22005	Revision: F	
Date: 2026/02/13 Time: 12:32:34 PM		Sheet 3 of 15	
File: F:\Dropbox\Projects\STK\NGPP Lite\6. Drawings\3. PCB\MT25015\RevA\MT25015\12V 14A Main PSU.SchDoc			