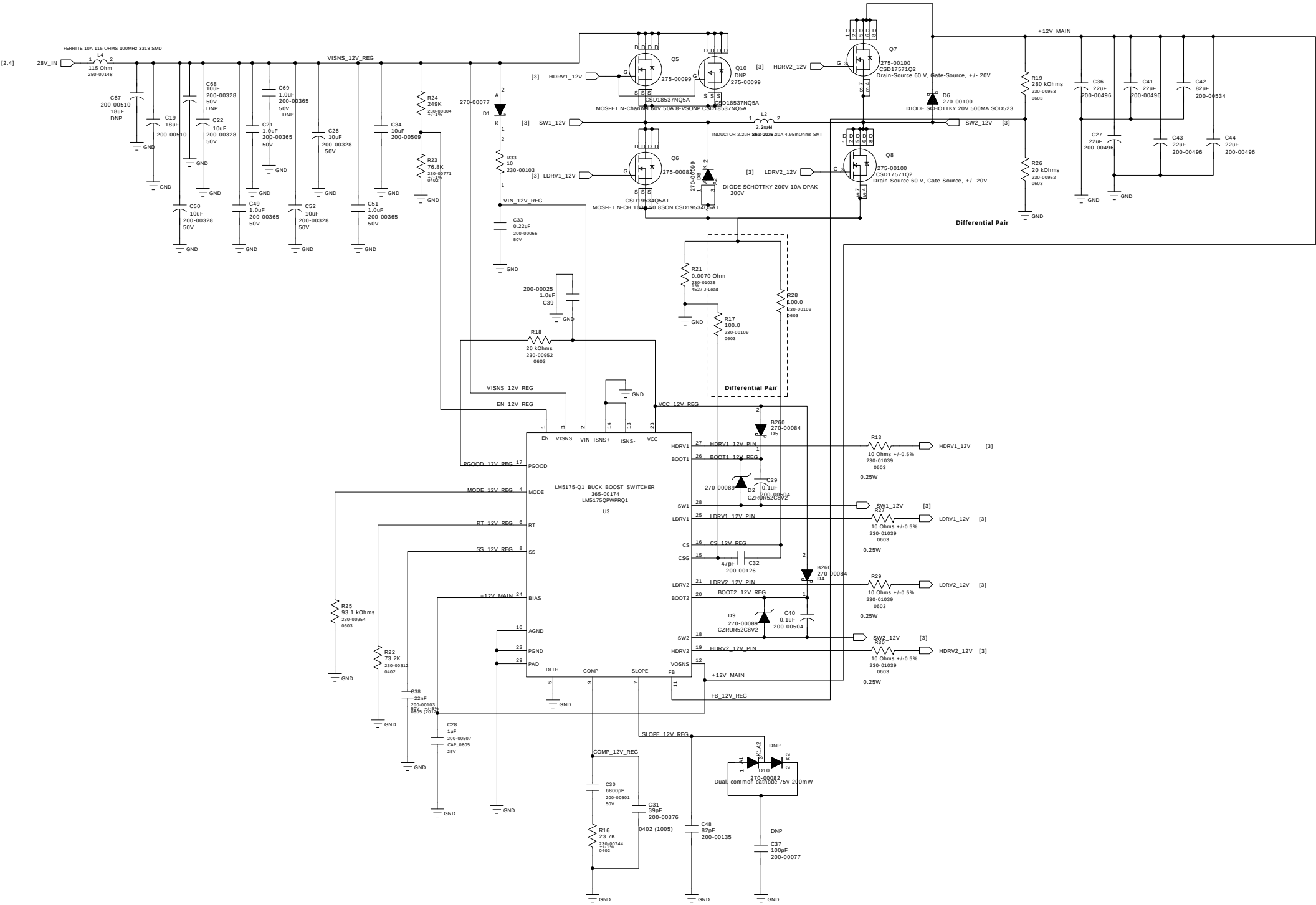REGULATOR 12V 6A