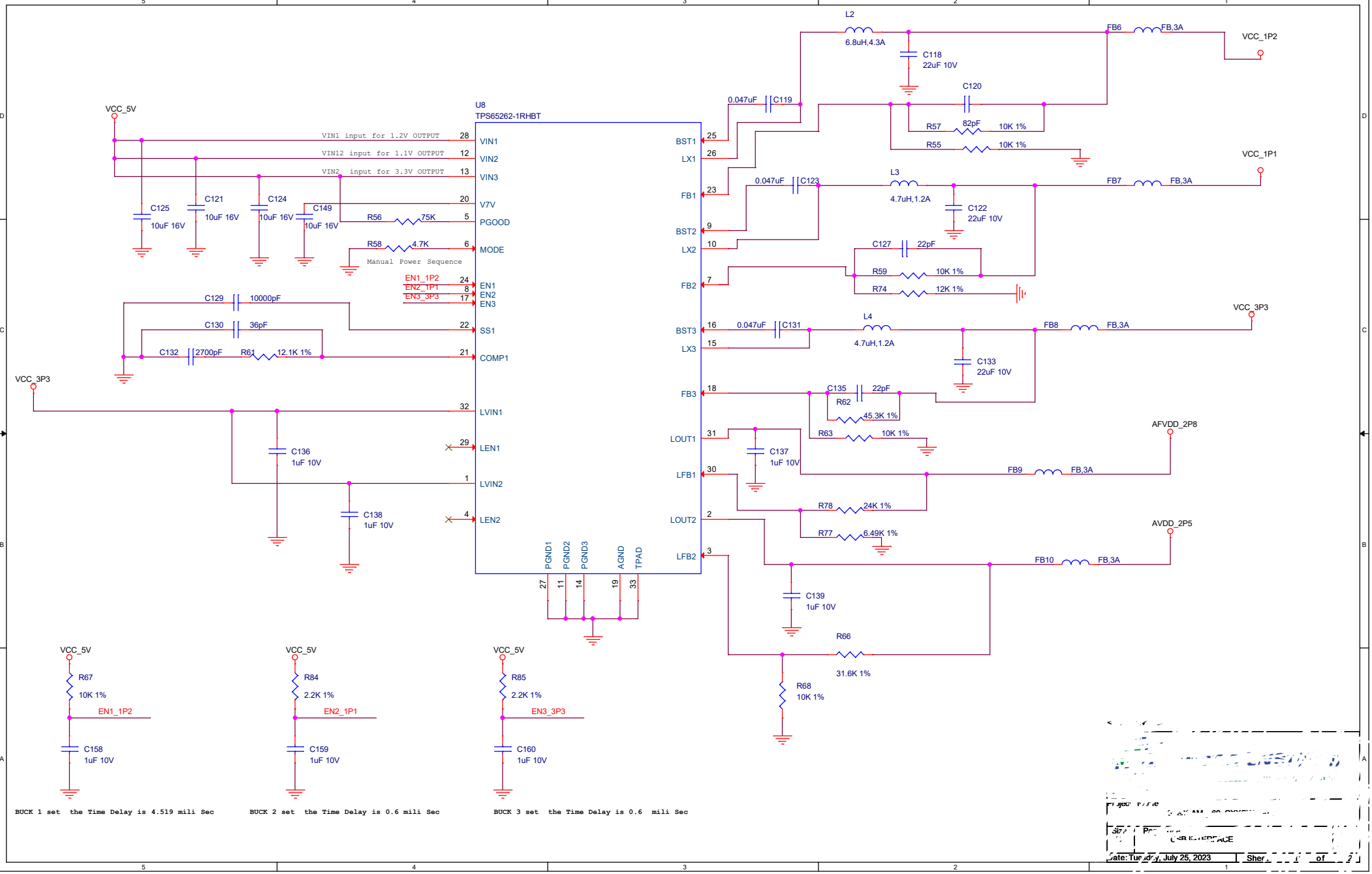
U8
TPS65262-1RHBT
VCC_5V
VIN1 input for 1.2V OUTPUT
VIN12 input for 1.1V OUTPUT
VIN2 input for 3.3V OUTPUT
VIN1
VIN2
VIN3
V7V
PGOOD
MODE
Manual Power Sequence
EN1_1P2
EN2_1P1
EN3_3P3
EN1
EN2
EN3
SS1
COMP1
LVIN1
LEN1
LVIN2
LEN2
PGND1
PGND2
PGND3
AGND
TPAD
BST1
LX1
FB1
BST2
LX2
FB2
BST3
LX3
FB3
LOUT1
LFB1
LOUT2
LFB2
C125 10uF 16V
C121 10uF 16V
C124 10uF 16V
C149 10uF 16V
R56 75K
R58 4.7K
C129 10000pF
C130 36pF
C132 2700pF
R61 12.1K 1%
VCC_3P3
C136 1uF 10V
C138 1uF 10V
L2 6.8uH,4.3A
C118 22uF 10V
FB6 FB,3A
VCC_1P2
C120
0.047uF C119
R57 82pF 10K 1%
R55 10K 1%
VCC_1P1
0.047uF C123
L3 4.7uH,1.2A
C122 22uF 10V
FB7 FB,3A
C127 22pF
R59 10K 1%
R74 12K 1%
VCC_3P3
0.047uF C131
L4 4.7uH,1.2A
FB8 FB,3A
C133 22uF 10V
C135 22pF
R62 45.3K 1%
R63 10K 1%
AFVDD_2P8
C137 1uF 10V
FB9 FB,3A
R78 24K 1%
R77 6.49K 1%
AVDD_2P5
FB10 FB,3A
C139 1uF 10V
R66 31.6K 1%
R68 10K 1%
VCC_5V
R67 10K 1%
EN1_1P2
C158 1uF 10V
R84 2.2K 1%
EN2_1P1
C159 1uF 10V
R85 2.2K 1%
EN3_3P3
C160 1uF 10V
BUCK 1 set the Time Delay is 4.519 mili Sec
BUCK 2 set the Time Delay is 0.6 mili Sec
BUCK 3 set the Time Delay is 0.6 mili Sec
Date: Tuesday, July 25, 2023