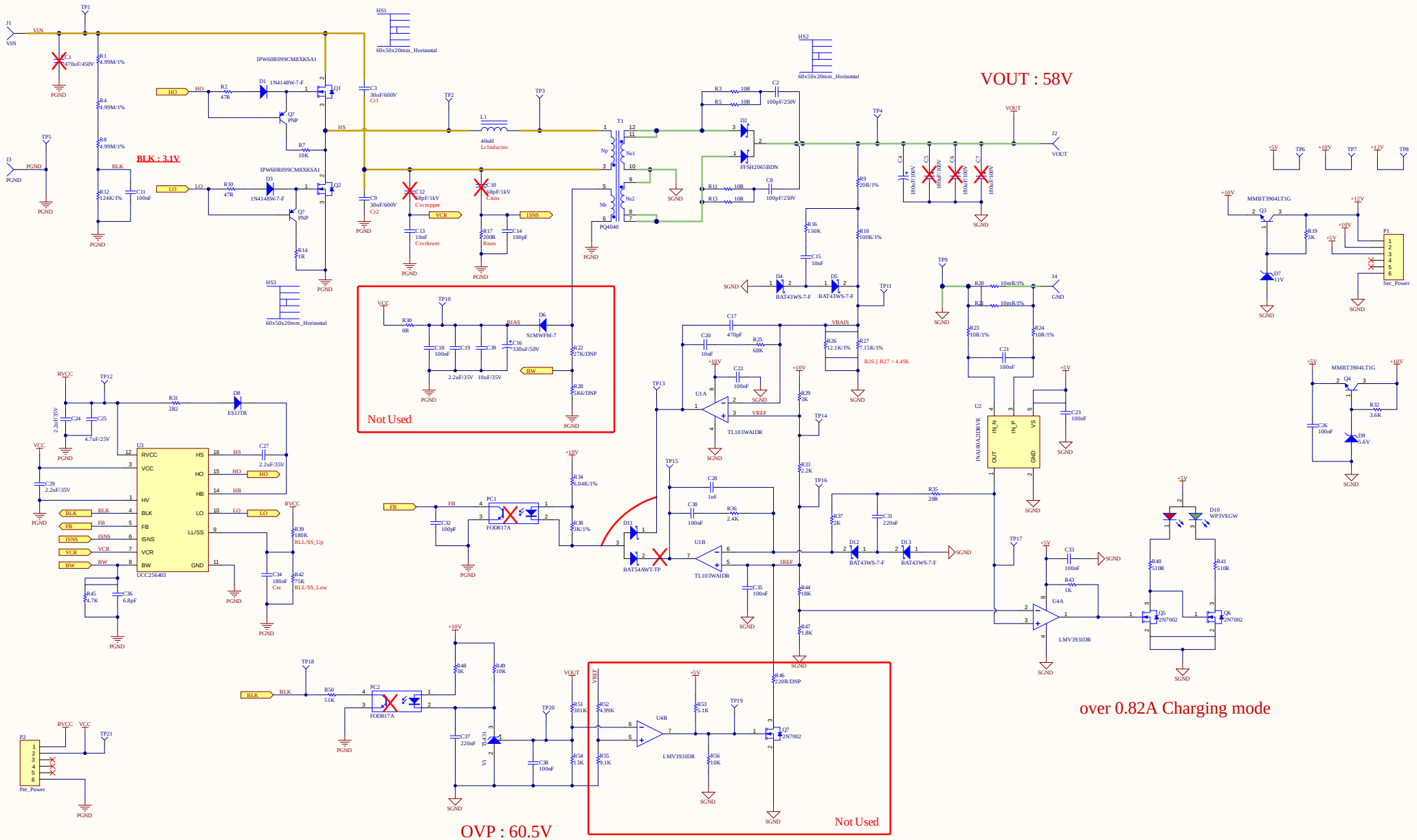

Note.

Document Title: UCC256403 LLC			Number
Size: A2	Project		Revision
Date: 오후 8:43:25 2025-11-21	Last Modified : 2025-11-21	Sheet 1 of 1	
SheetName: Sheet1.SchDoc		Drawn By:	