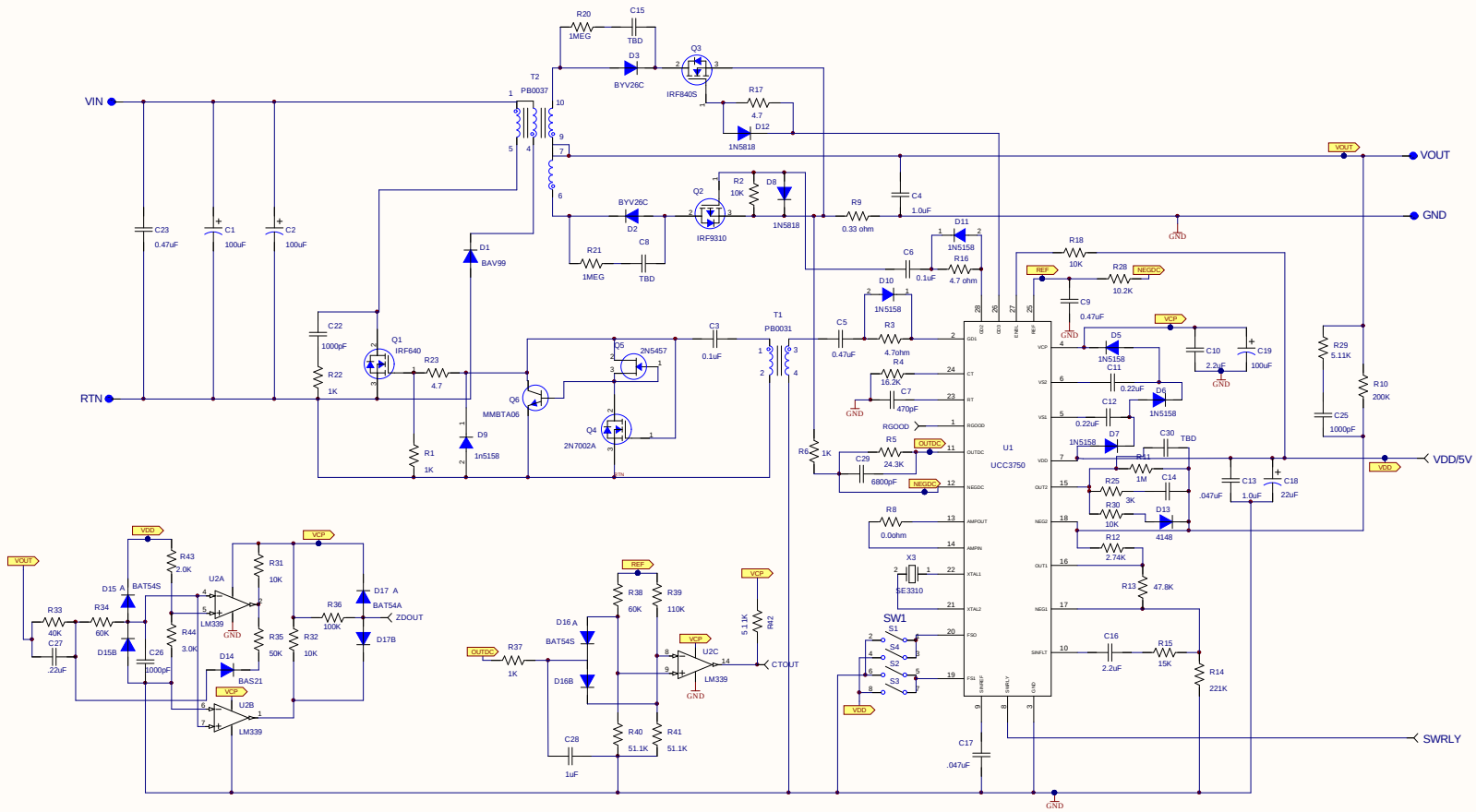

Title	3750 Ringer EVM		
Size C	EVM Name 3750		Rev A
Engineer John Bottrill	Date 1/10/01	Drawn by Michael Pantanella	
	Filename 3750.sch	Sheet 1 of 1	

Board S