THIS DOCUMENT AND THE DATA DISCLOSED HEREIN OR HEREWITH IS THE PROPERTY OF ALTIUM LIMITED AND MAY BE FREELY DISTRIBUTED IN WHOLE. NO RIGHTS ARE RESERVED OR EXPRESS OR IMPLIED WARANTEE GIVEN.

REVISION	DESCRIPTION	DATE	APPROVED

5V to 3.3V,1.8V and 1.15V PMIC

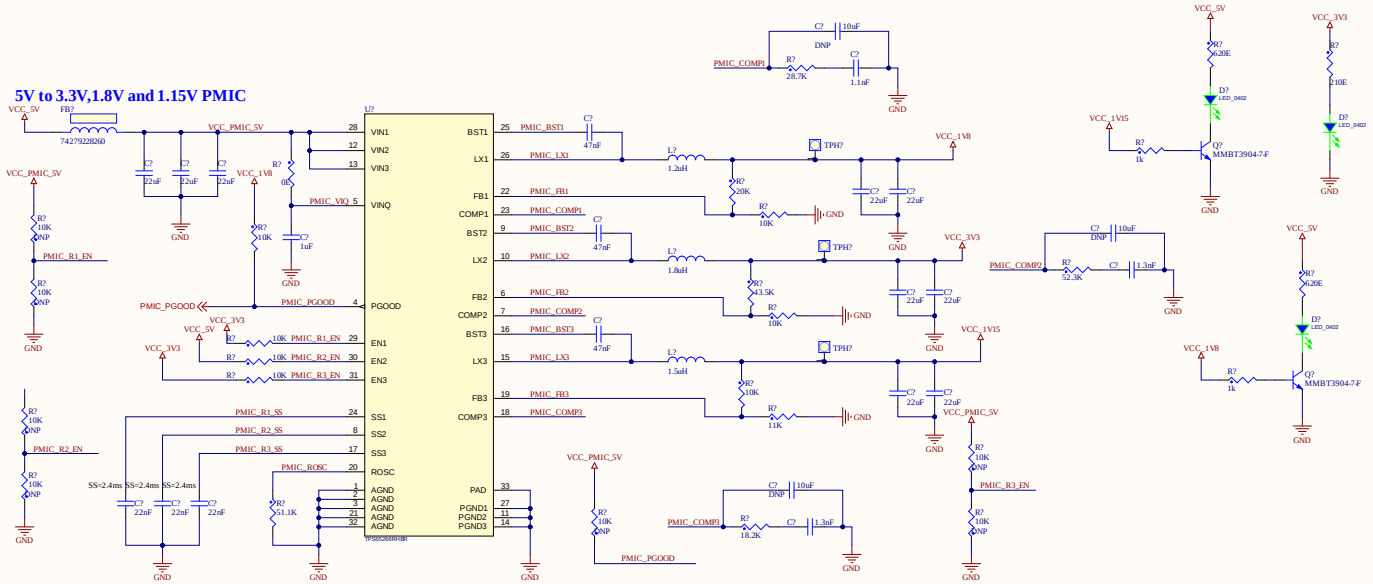

APPROVALS	DATE
ENG: -	
DSN: -	
CHK: -	
REFERENCE DOCUMENTS	
BOM:	
ASSY DWG:	
FAB DWG:	
PCB DWG:	

PROJECT: Altium

PROJECT REVISION: Not in version control
DOCUMENT REVISION: Not in version control
DESIGN ITEM: Not in version control

TITLE: *

SIZE	CAGE CODE	DWG NO.	REV
C			

SCALE: | FILE NAME: PMIC.SchDoc | SHEET * OF *