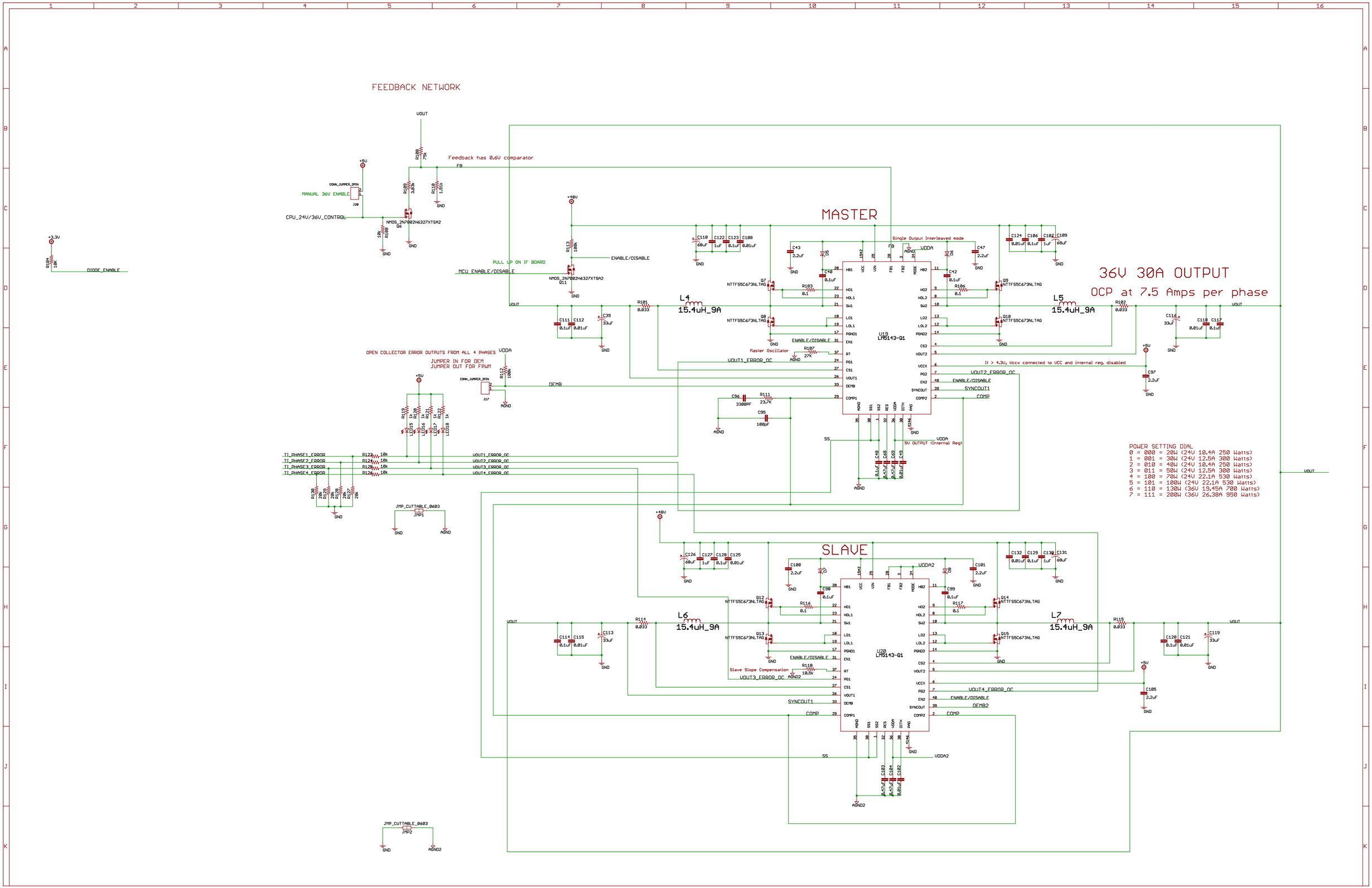
FEEDBACK NETWORK
MASTER
SLAVE
36V 30A OUTPUT
OCP at 7.5 Amps per phase
Feedback has 0.6V comparator
MANUAL 36V ENABLE
CPU_24V/36V_CONTROL
PULL UP ON IF BOARD
MCU ENABLE/DISABLE
DIODE_ENABLE
ENABLE/DISABLE
Single Output Interleaved mode
L4
15.4uH_9A
L5
15.4uH_9A
L6
15.4uH_9A
L7
15.4uH_9A
U19
LM5143-Q1
U20
LM5143-Q1
Master Oscillator
Slave Slope Compensation
OPEN COLLECTOR ERROR OUTPUTS FROM ALL 4 PHASES
JUMPER IN FOR DEM
JUMPER OUT FOR FPWM
If > 4.3V, Vccx connected to VCC and internal reg. disabled
5V OUTPUT (Internal Reg)
POWER SETTING DIAL
0 = 000 = 20W (24V 10.4A 250 Watts)
1 = 001 = 30W (24V 12.5A 300 Watts)
2 = 010 = 40W (24V 10.4A 250 Watts)
3 = 011 = 50W (24V 12.5A 300 Watts)
4 = 100 = 70W (24V 22.1A 530 Watts)
5 = 101 = 100W (24V 22.1A 530 Watts)
6 = 110 = 130W (36V 19.45A 700 Watts)
7 = 111 = 200W (36V 26.38A 950 Watts)