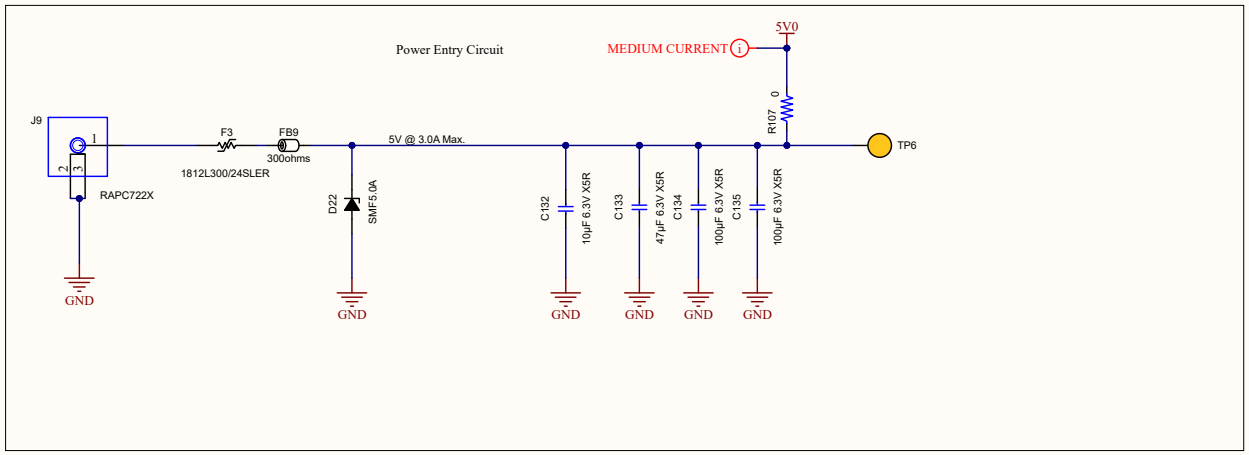
Power Entry Circuit
MEDIUM CURRENT
5V0
R107 0
J9
RAPC722X
F3
1812L300/24SLER
FB9
300ohms
5V @ 3.0A Max.
D22
SMF5.0A
C132 10µF 6.3V X5R
C133 47µF 6.3V X5R
C134 100µF 6.3V X5R
C135 100µF 6.3V X5R
TP6
GND

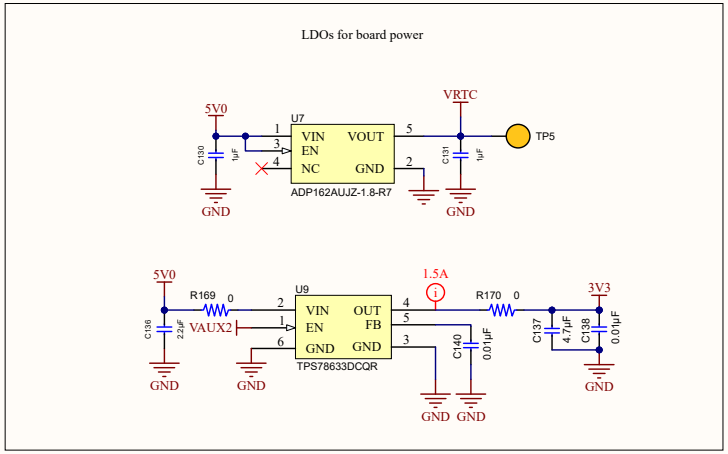
LDOs for board power
5V0
VRTC
U7
VIN
EN
NC
VOUT
GND
ADP162AUJZ-1.8-R7
C130 1µF
C131 1µF
TP5
GND
5V0
R169 0
VAUX2
C136 2.2µF
U9
VIN
EN
GND
OUT
FB
GND
TPS78633DCQR
1.5A
R170 0
3V3
C140 0.01µF
C137 4.7µF
C138 0.01µF
GND

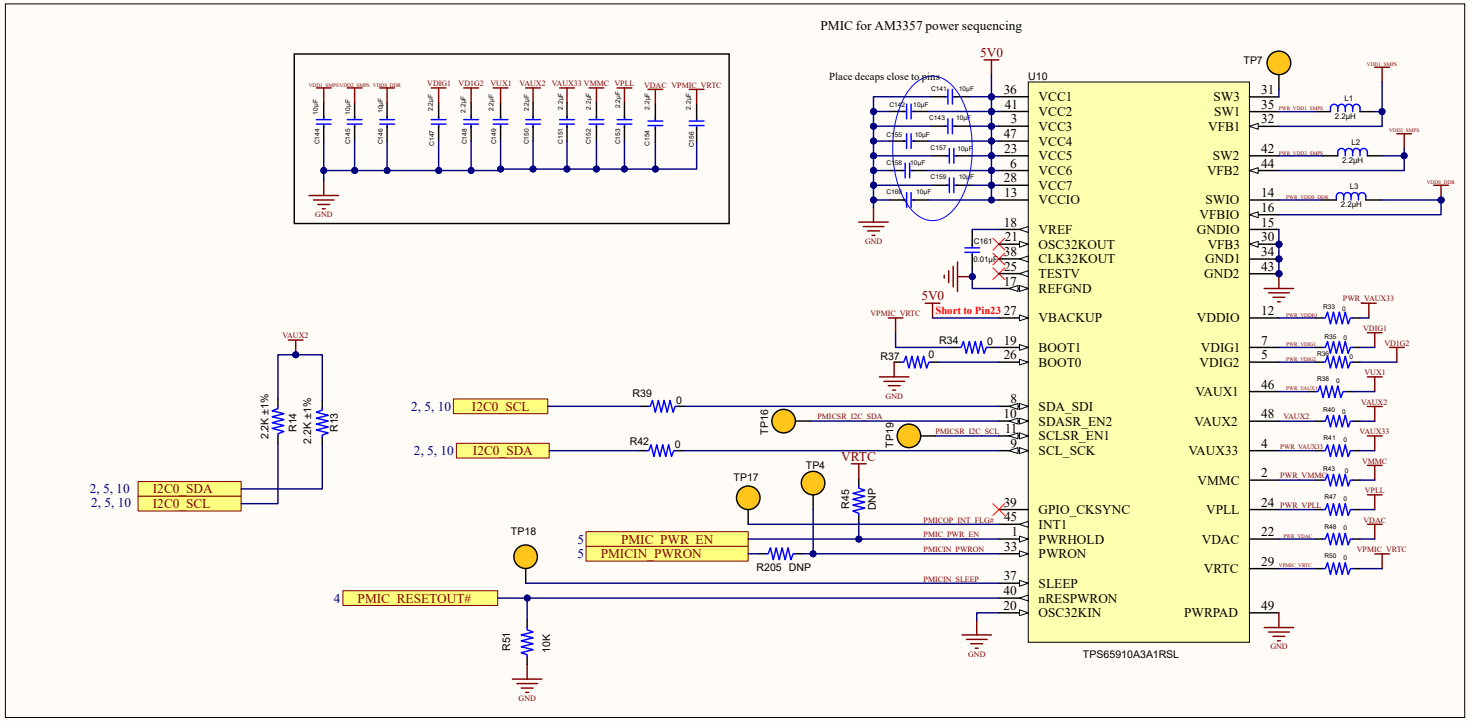
PMIC for AM3357 power sequencing
Place decaps close to pins
5V0
U10
VCC1
VCC2
VCC3
VCC4
VCC5
VCC6
VCC7
VCCIO
VREF
OSC32KOUT
CLK32KOUT
TESTV
REFGND
VBACKUP
BOOT1
BOOT0
SDA_SDI
SDASR_EN2
SCLSR_EN1
SCL_SCK
GPIO_CKSYNC
INT1
PWRHOLD
PWRON
SLEEP
nRESPWRON
OSC32KIN
SW3
SW1
VFB1
SW2
VFB2
SWIO
VFBIO
GNDIO
VFB3
GND1
GND2
VDDIO
VDIG1
VDIG2
VAUX1
VAUX2
VAUX33
VMMC
VPLL
VDAC
VRTC
PWRPAD
TPS65910A3A1RSL
TP7
L1 2.2µH
L2 2.2µH
L3 2.2µH
Short to Pin23
R34 0
R37 0
R39 0
R42 0
TP16
TP19
PMICSR_I2C_SDA
PMICSR_I2C_SCL
2, 5, 10 I2C0_SCL
2, 5, 10 I2C0_SDA
VAUX2
2.2K ±1% R14
2.2K ±1% R13
TP17
TP4
VRTC
R45 DNP
TP18
5 PMIC_PWR_EN
5 PMICIN_PWRON
R205 DNP
4 PMIC_RESETOUT#
R51 10K
PMICOP_INT_FLG#
PMIC_PWR_EN
PMICIN_PWRON
PMICIN_SLEEP
PWR_VAUX33
VDIG1
VDIG2
VUX1
VAUX2
VAUX33
VMMC
VPLL
VDAC
VPMIC_VRTC
GND

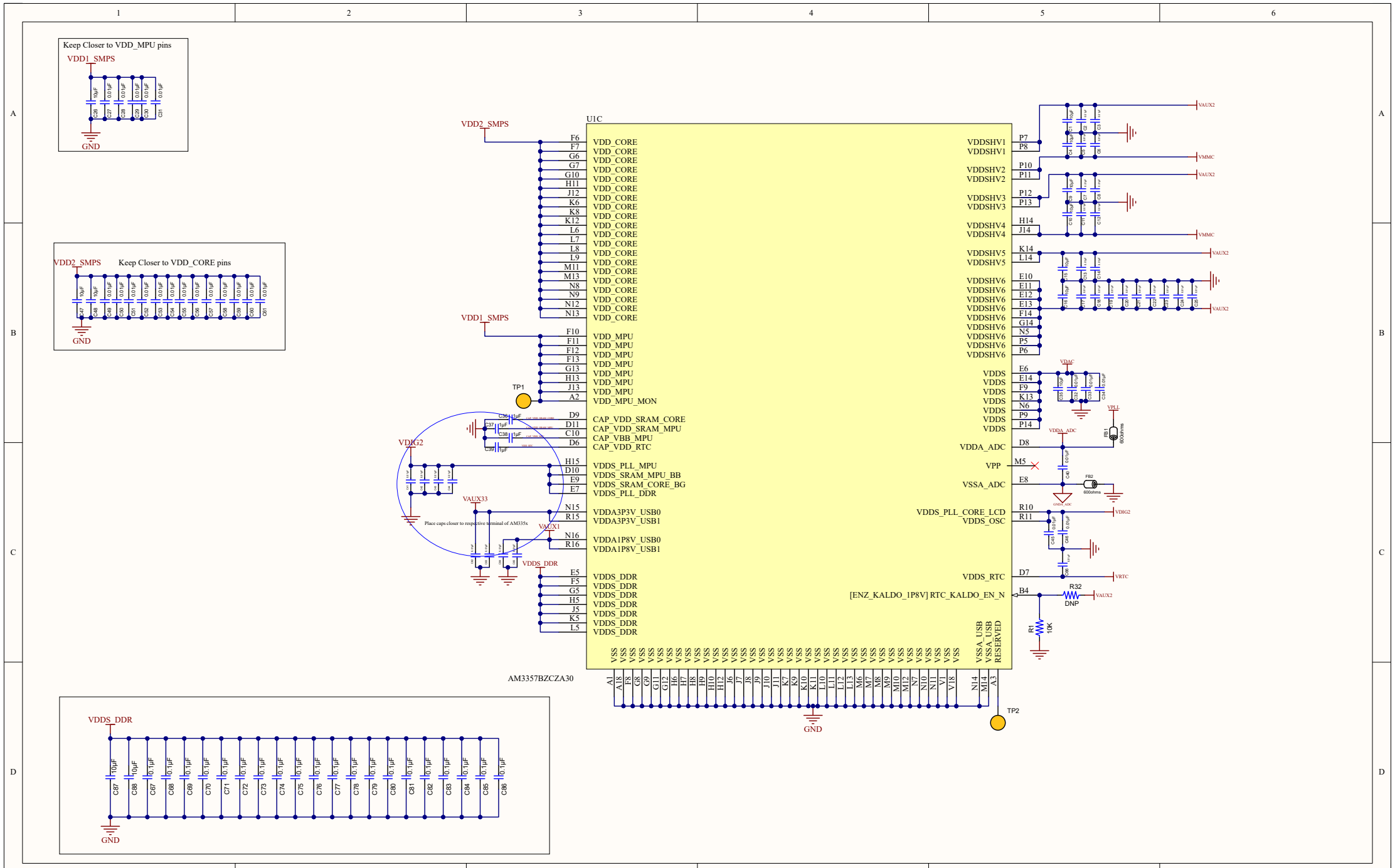
Keep Closer to VDD_MPU pins
VDD1_SMPS
GND
VDD2_SMPS
Keep Closer to VDD_CORE pins
GND
U1C
VDD2_SMPS
VDD1_SMPS
TP1
VDDG2
VAUX33
VAUX1
VDDS_DDR
Place caps closer to respective terminal of AM335x
VDD_CORE
VDD_MPU
VDD_MPU_MON
CAP_VDD_SRAM_CORE
CAP_VDD_SRAM_MPU
CAP_VBB_MPU
CAP_VDD_RTC
VDDS_PLL_MPU
VDDS_SRAM_MPU_BB
VDDS_SRAM_CORE_BG
VDDS_PLL_DDR
VDDA3P3V_USB0
VDDA3P3V_USB1
VDDA1P8V_USB0
VDDA1P8V_USB1
VDDS_DDR
VDDSHV1
VDDSHV2
VDDSHV3
VDDSHV4
VDDSHV5
VDDSHV6
VDDS
VDDA_ADC
VPP
VSSA_ADC
VDDS_PLL_CORE_LCD
VDDS_OSC
VDDS_RTC
[ENZ_KALDO_1P8V] RTC_KALDO_EN_N
VSSA_USB
VSSA_USB
RESERVED
VSS
AM3357BZCZA30
TP2
GND
VAUX2
VMMC
VDAC
VPLL
VDDA_ADC
VDIG2
VRTC
R32
DNP
R1
10K
FB1
60ohms
FB2
600ohms
VDDS_DDR
GND