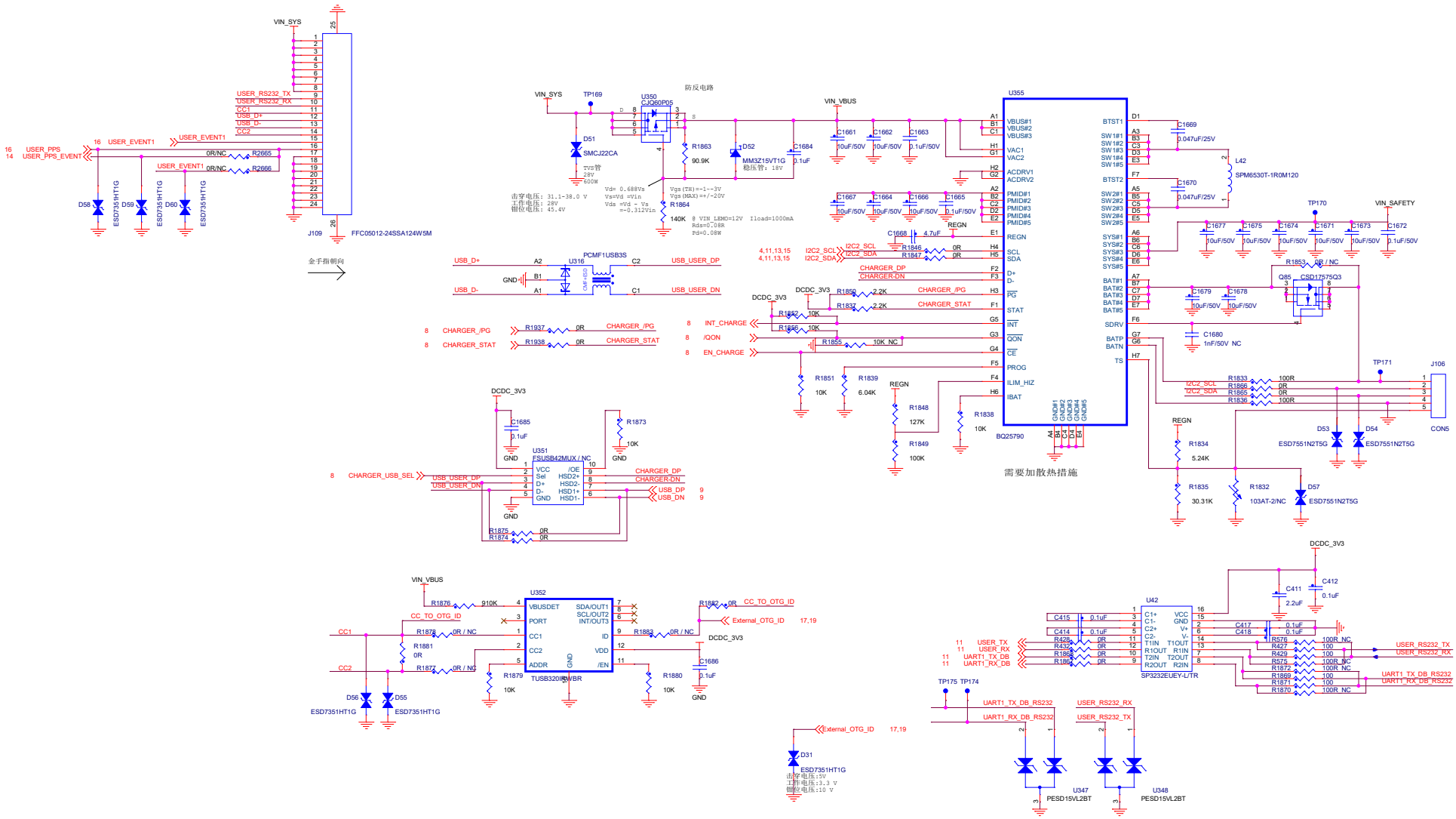

Tersus GNSS 天硕导航		
Title <Title>		
Size A2	Document Number <Doc>	Rev V1.0
	Sheet 19 of 22	