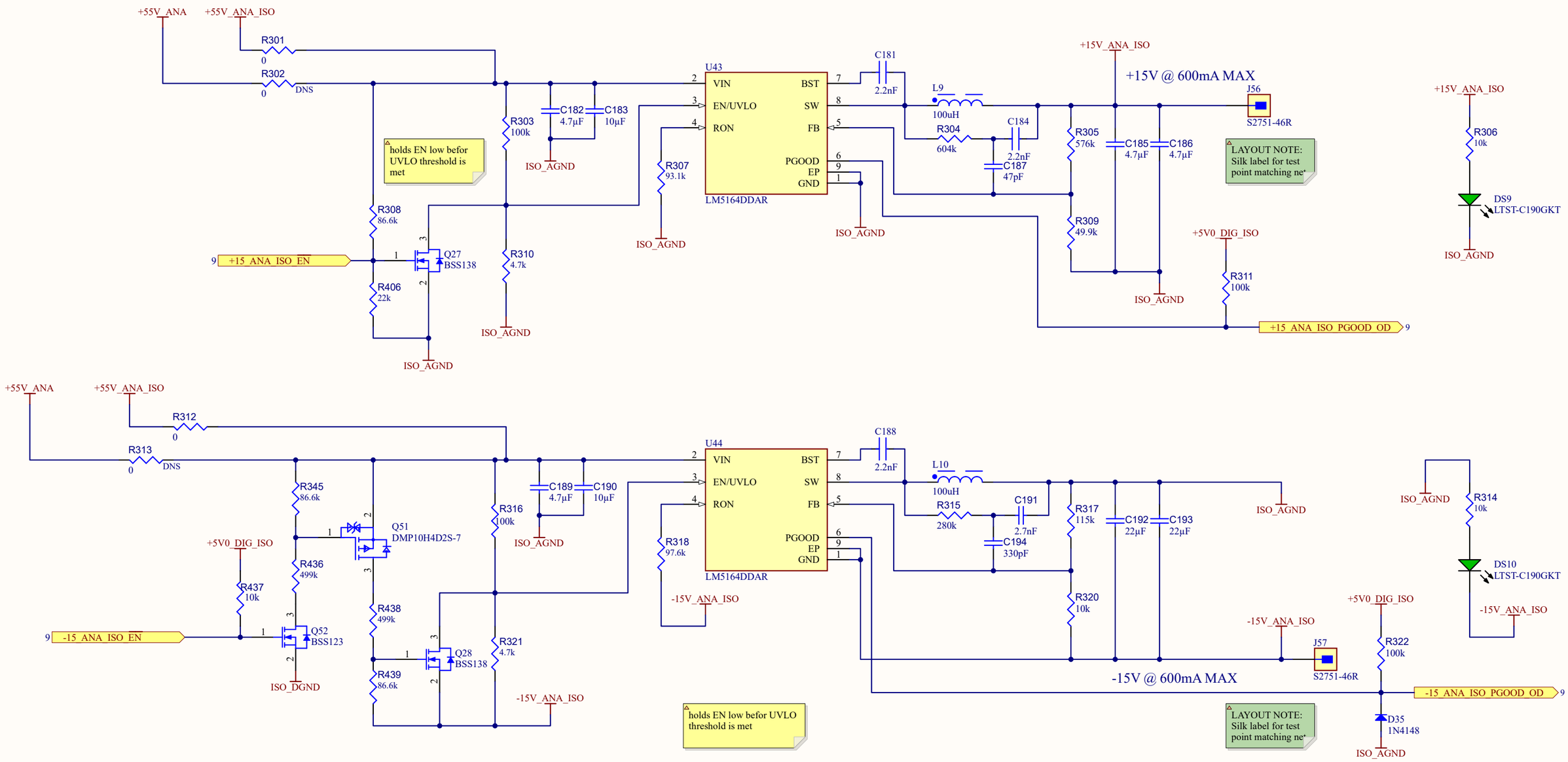

=Confidentiality

Title		
Size: B	Number:	Revision:
Date: 8/19/2025	Time: 1:56:22 PM	Sheet of
File: C:\Users\Public\Documents\Altium\ARB_AUX_FET Board\Analog Supplies Pos-Neg 15V.SchDoc		

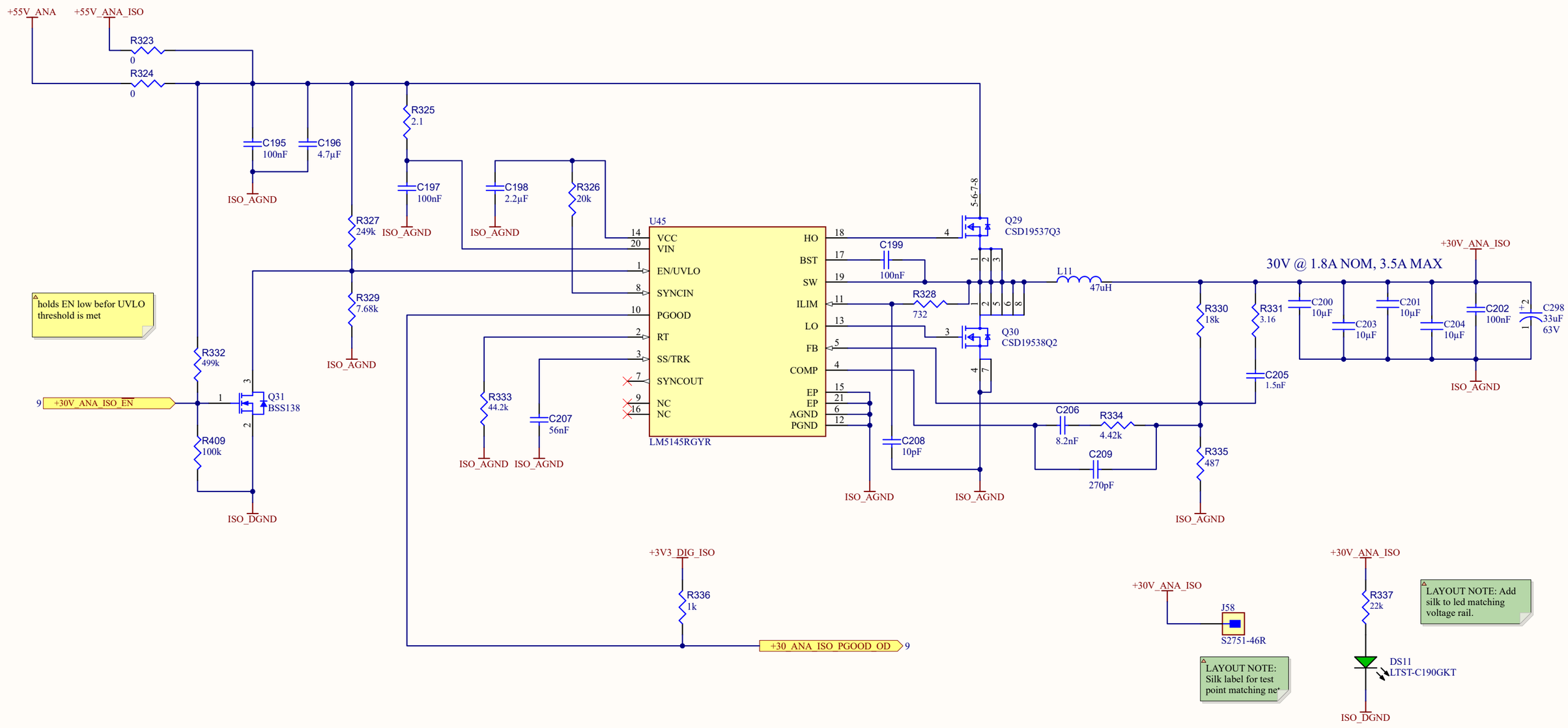

=Confidentiality

Title		
Size: B	Number:	Revision:
Date: 8/19/2025	Time: 1:56:22 PM	Sheet of
File: C:\Users\Public\Documents\Altium\ARB_AUX_FET Board\Analog Supply Pos-30V.SchDoc		

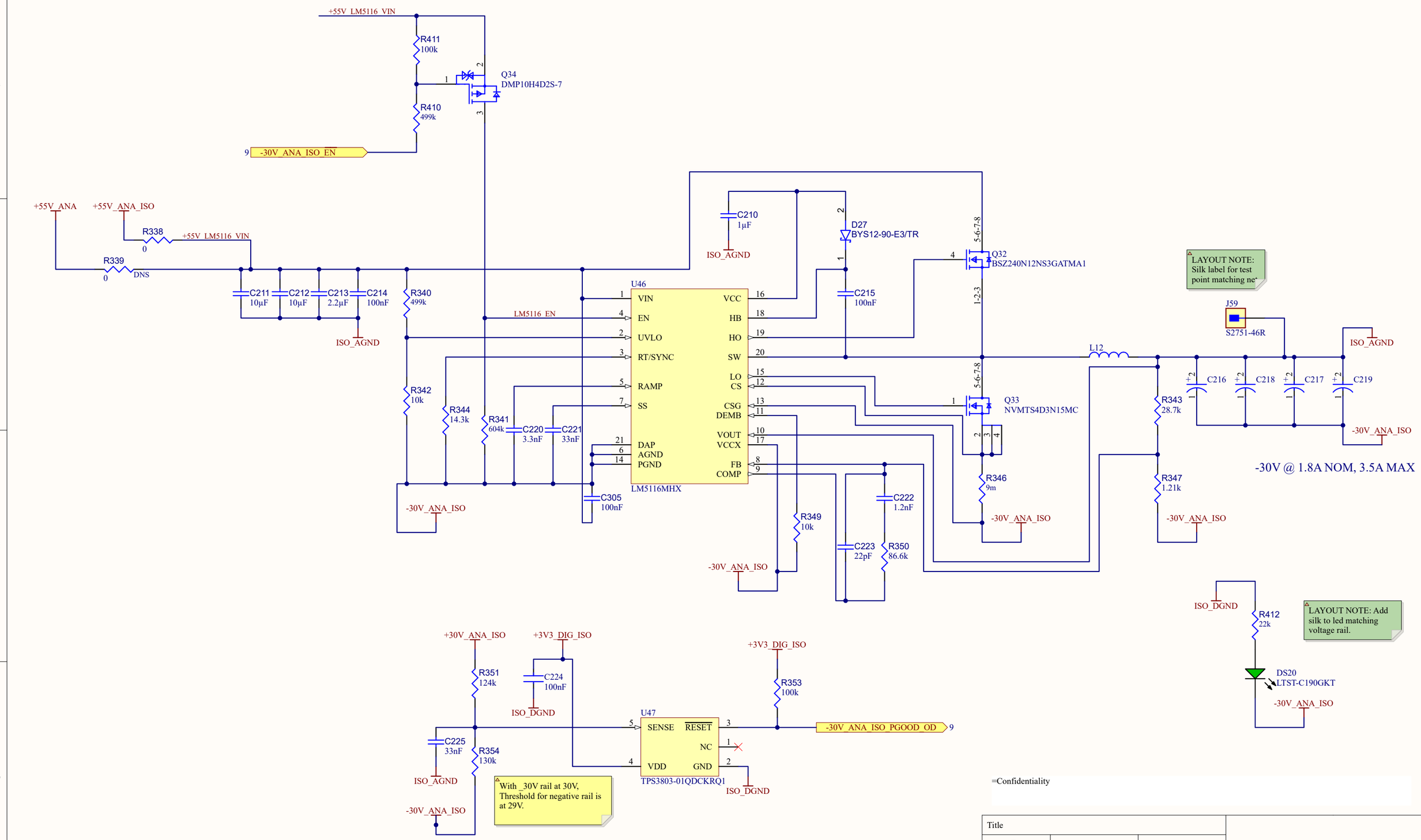
+55V_LM5116_VIN
R411
100k
Q34
DMP10H4D2S-7
R410
499k
-30V_ANA_ISO_EN
+55V_ANA
+55V_ANA_ISO
R338
0
R339
0
DNS
C211
10µF
C212
10µF
C213
2.2µF
C214
100nF
ISO_AGND
R340
499k
R342
10k
R344
14.3k
R341
604k
C220
3.3nF
C221
33nF
-30V_ANA_ISO
LM5116_EN
U46
VIN
EN
UVLO
RT/SYNC
RAMP
SS
DAP
AGND
PGND
VCC
HB
HO
SW
LO
CS
CSG
DEMB
VOUT
VCCX
FB
COMP
LM5116MHX
C305
100nF
C210
1µF
ISO_AGND
D27
BYS12-90-E3/TR
C215
100nF
Q32
BSZ240N12NS3GATMA1
Q33
NVMTS4D3N15MC
R346
9m
-30V_ANA_ISO
R349
10k
-30V_ANA_ISO
C222
1.2nF
C223
22pF
R350
86.6k
LAYOUT NOTE:
Silk label for test point matching net
J59
S2751-46R
ISO_AGND
L12
C216
C218
C217
C219
-30V_ANA_ISO
R343
28.7k
R347
1.21k
-30V_ANA_ISO
-30V @ 1.8A NOM, 3.5A MAX
ISO_DGND
R412
22k
LAYOUT NOTE: Add silk to led matching voltage rail.
DS20
LTST-C190GKT
-30V_ANA_ISO
+30V_ANA_ISO
+3V3_DIG_ISO
R351
124k
C224
100nF
ISO_DGND
+3V3_DIG_ISO
R353
100k
U47
SENSE
RESET
NC
VDD
GND
TPS3803-01QDCKRQ1
-30V_ANA_ISO_PGOOD_OD
ISO_DGND
C225
33nF
R354
130k
ISO_AGND
-30V_ANA_ISO
With _30V rail at 30V, Threshold for negative rail is at 29V.
=Confidentiality
Title
Size: B
Number:
Revision:
Date: 8/19/2025
Time: 1:56:22 PM
Sheet of
File: C:\Users\Public\Documents\Altium\ARB_AUX_FET Board\Analog Supply Neg-30V.SchDoc