Mode	Auto mode	Manual mode
Mode 1	0	0
Mode 0	0	1

RJ45 connector change to NO LED

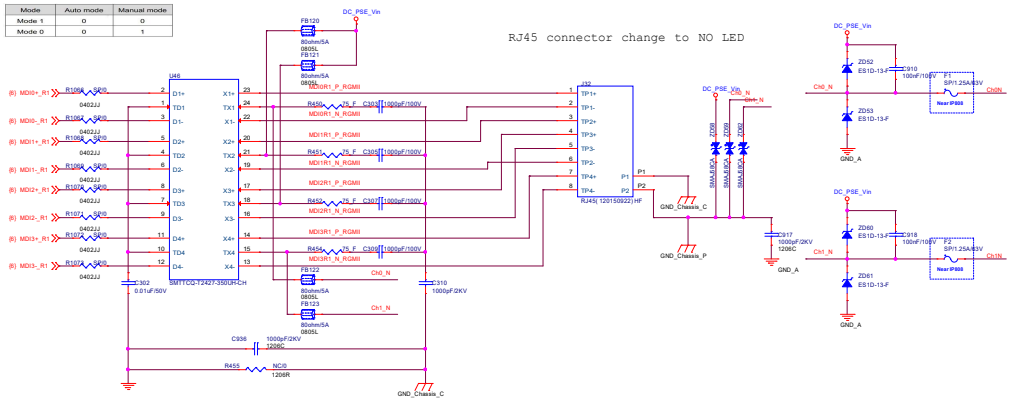

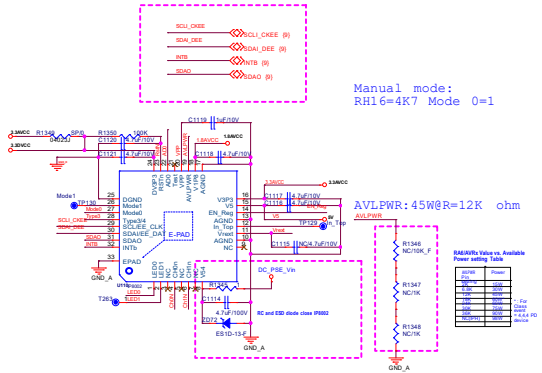

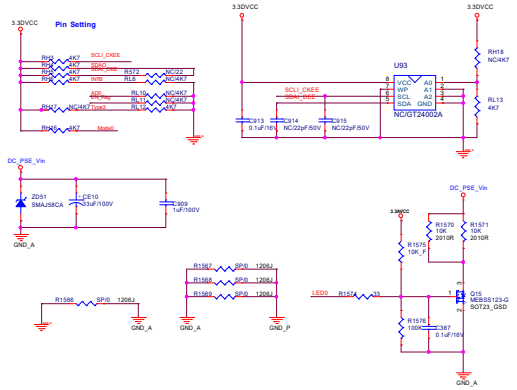

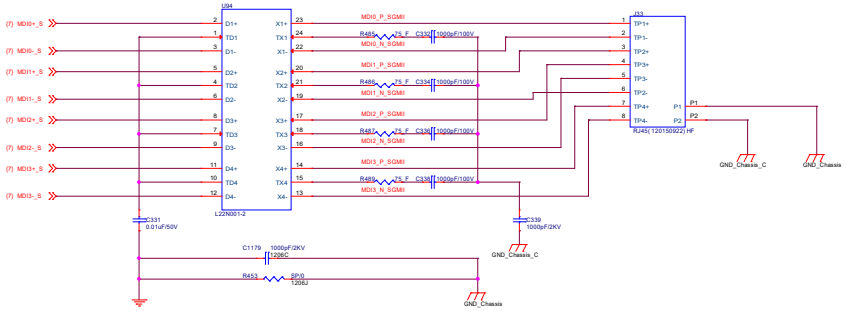

PCIE1_USB_SIGNAL

PCIE1_USB_TYPEA_CON

Layout note: USB differential trace is 90 Ohm characteristic impedance.

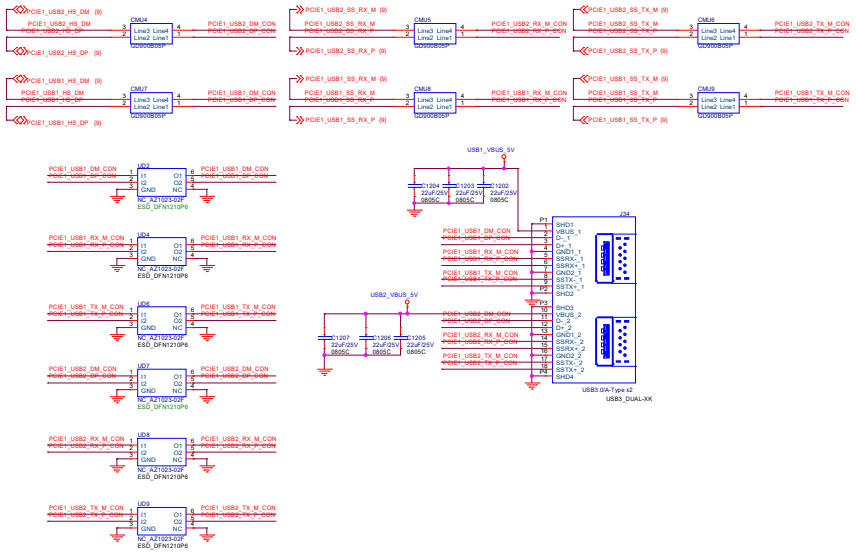

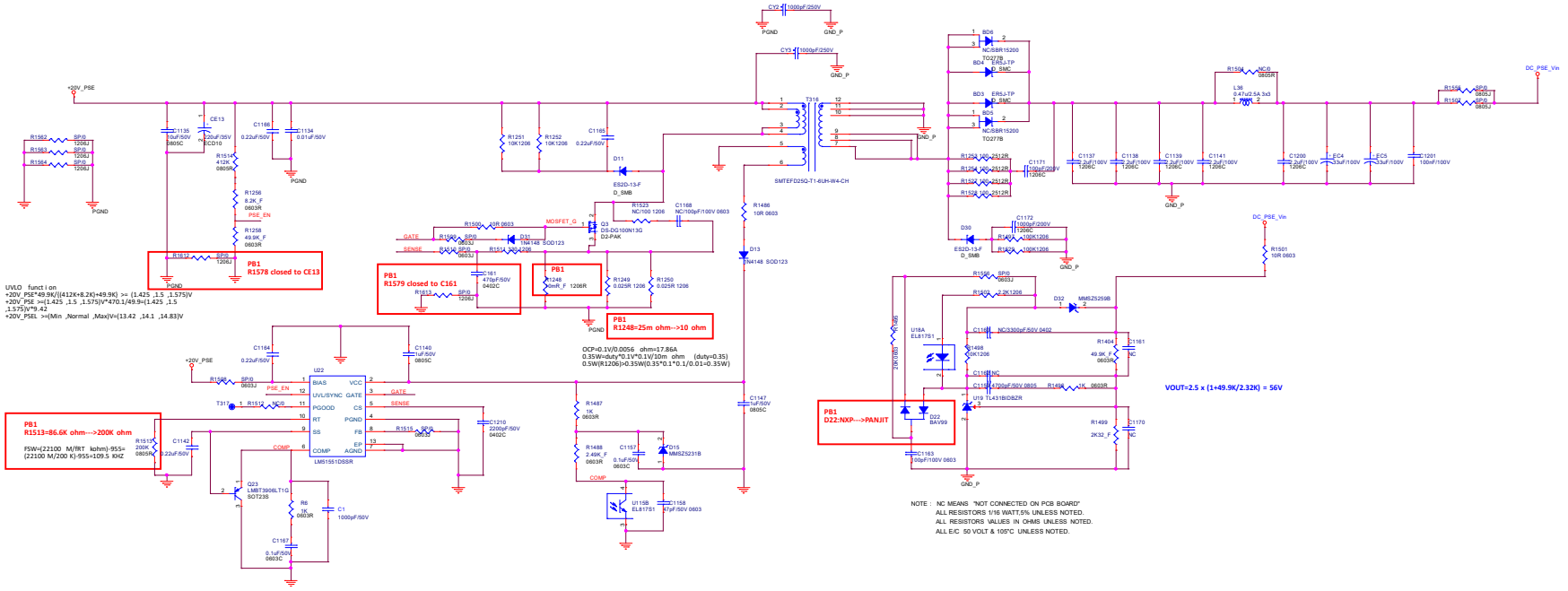
+20V_PSE
R1562 SPI0 1206J
R1563 SPI0 1206J
R1564 SPI0 1206J
PGND
C1135 1uF/50V 0805C
CE13 10uF/35V ECD10
R1514 412K 0805R
R1256 8.2K_F 0603R
PSE_EN
R1258 49.9K_F 0603R
R1812 SPI0 1206J
PB1
R1578 closed to CE13
C1166 0.22uF/50V
C1134 0.01uF/50V
PGND
UVLO funct i on
+20V_PSE*49.9K/((412K+8.2K)+49.9K) >= (1.425 ,1.5 ,1.575)V
+20V_PSE >=(1.425 ,1.5 ,1.575)V*470.1/49.9=(1.425 ,1.5 ,1.575)V*9.42
+20V_PSEL >=(Min ,Normal ,Max)V=(13.42 ,14.1 ,14.83)V
+20V_PSE
R1566 SPI0 0603J
PSE_EN
T317 R1512 NC/0
R1513 200K 0805R
C1142 0.22uF/50V
PB1
R1513=86.6K ohm-->200K ohm
F5W=(22100 M/RT kohm)-955=
(22100 M/200 K)-955=109.5 KHZ
C1164 0.22uF/50V
U22
BIAS
UVLO/SYNC
PGOOD
RT
SS
COMP
VCC
GATE
CS
PGND
FB
EP
AGND
LM51551DSSR
C1140 1uF/50V 0805C
GATE
SENSE
R1515 0R/0 0603J
C1210 2200pF/50V 0402C
Q23 LMBT3906LT1G SOT23S
R6 2K 0603R
C1 1000pF/50V
C1167 0.1uF/50V 0603C
R1251 10K1206
R1252 10K1206
C1165 0.22uF/50V
D11 ES2D-13-F D_SMB
R1500 10R 0603
MOSFET_G
D31 1N4148 SOD123
R1502 SPI0 0603J
R1514 SPI0 0603J
R1518 2K2 1206
R1523 NC/100 1206
C1168 NC/100pF/100V 0603
Q3 DS-DG100N13G D2-PAK
R1486 10R 0603
D13 1N4148 SOD123
C161 470pF/50V 0402C
PB1
R1579 closed to C161
R1813 SPI0 1206J
PB1
R1248 5mR_F 1206R
R1249 0.025R 1206
R1250 0.025R 1206
PGND
PB1
R1248=25m ohm-->10 ohm
OCP=0.1V/0.0056 ohm=17.86A
0.35W=duty*0.1V*0.1V/10m ohm (duty=0.35)
0.5W(R1206)>0.35W(0.35*0.1*0.1/0.01=0.35W)
R1487 1K 0603R
R1488 2.49K_F 0603R
C1157 0.1uF/50V 0603C
D15 MMSZ5231B
COMP
U11B EL817S1
C1158 47pF/50V 0603
C1147 1uF/50V 0805C
CY2 1000pF/250V
PGND
GND_P
CY3 1000pF/250V
GND_P
T316
SMTEFD25Q-T1-6UH-W4-CH
GND_P
BD6 NC/SBR15200 TO277B
BD4 ERSJ-TP D_SMC
BD3 ERSJ-TP D_SMC
BD5 NC/SBR15200 TO277B
R1254 1K0 2512R
R1255 1K0 2512R
R1257 1K0 2512R
R1253 1K0 2512R
C1171 100pF/200V 1206C
D30 ESD-13-F D_SMB
C1172 1000pF/200V 1206C
R1402 10K1206
R1403 10K1206
GND_P
R150 NC/0 0805R
L36 0.47uV2.5A 3x3
C1137 3.3uF/100V 1206C
C1138 3.3uF/100V 1206C
C1139 3.3uF/100V 1206C
C1141 3.3uF/100V 1206C
C1200 3.3uF/100V 1206C
EC4 33uF/100V
EC5 33uF/100V
C1201 100nF/100V
GND_P
R1558 SPI0 0805J
R1559 SPI0 0805J
DC_PSE_Vin
DC_PSE_Vin
R1501 10R 0603
R1556 SPI0 0603J
R1405 2.2K1206
D32 MMSZ5259B
R1465 20K1000
U18A EL817S1
C1165 NC/3300pF/50V 0402
R1498 20K1206
R1404 49.9K_F 0603R
C1161 NC
C1166 NC
C1162 470pF/50V 0805
R1499 1K 0603R
U19 TL431BIDBZR
PB1
D22:NXP-->PANJIT
D22 BAV99
R499 2K32_F
C1170 NC
C1163 100pF/100V 0603
GND_P
VOUT=2.5 x (1+49.9K/2.32K) = 56V
NOTE : NC MEANS "NOT CONNECTED ON PCB BOARD"
ALL RESISTORS 1/16 WATT,5% UNLESS NOTED.
ALL RESISTORS VALUES IN OHMS UNLESS NOTED.
ALL E/C 50 VOLT & 105°C UNLESS NOTED.
VBAT_SYS_PWR
R1300 NC/100K
D25 SOD_523 NCLRB520S-30T1G
R1299 100K
R1302 NC/0
PSE_EN
Q44 LMBT3904LT1G SOT23S
(3) SM_GPIO_69
R1303 1K
R1298 1K
C1091 NC/0.1uF/16V
Q43 LMBT3904LT1G SOT23S
R1301 100K
H :PSE POWER ON
L :PSE POWER OFF