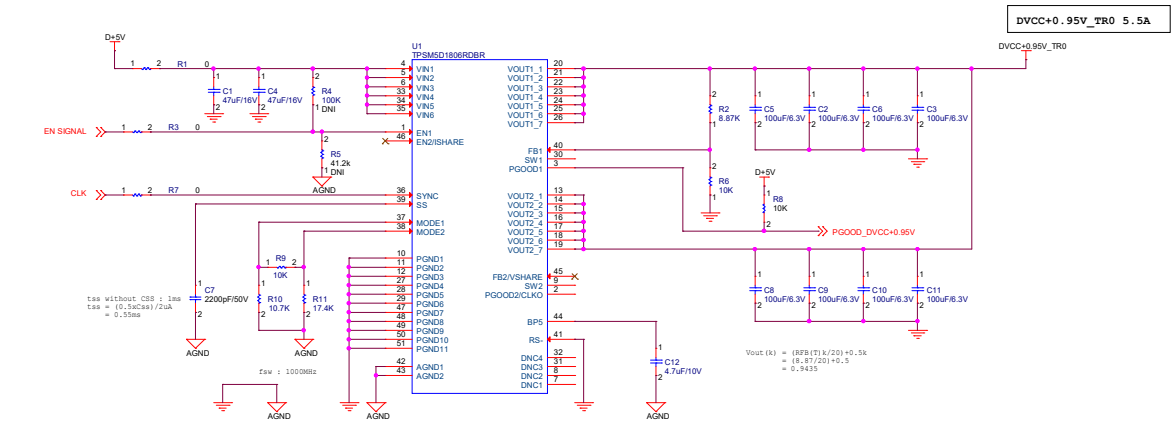
DVCC+0.95V_TR0 5.5A
U1
TPSM5D1806RDBR
D+5V
DVCC+0.95V_TR0
EN SIGNAL
CLK
PGOOD_DVCC+0.95V
tss without CSS : 1ms
tss = (0.5xCss)/2uA
= 0.55ms
fsw : 1000KHz
Vout(k) = (RFB(T)k/20)+0.5k
= (8.87/20)+0.5
= 0.9435
AGND

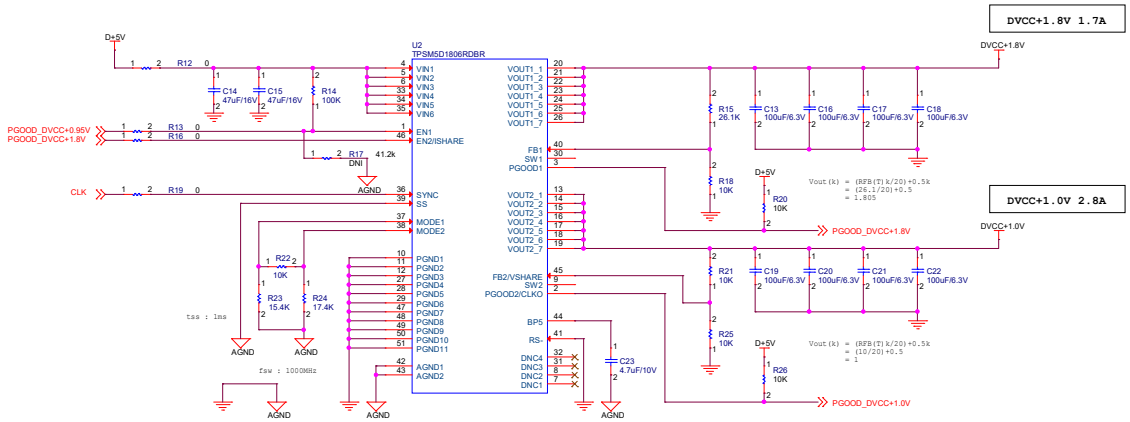
DVCC+1.8V 1.7A
DVCC+1.0V 2.8A
U2
TPSM5D1806RDBR
D+5V
DVCC+1.8V
DVCC+1.0V
PGOOD_DVCC+0.95V
PGOOD_DVCC+1.8V
CLK
PGOOD_DVCC+1.8V
PGOOD_DVCC+1.0V
tss : 1ms
fsw : 1000KHz
Vout(k) = (RFB(T)k/20)+0.5k
= (26.1/20)+0.5
= 1.805
Vout(k) = (RFB(T)k/20)+0.5k
= (10/20)+0.5
= 1
AGND