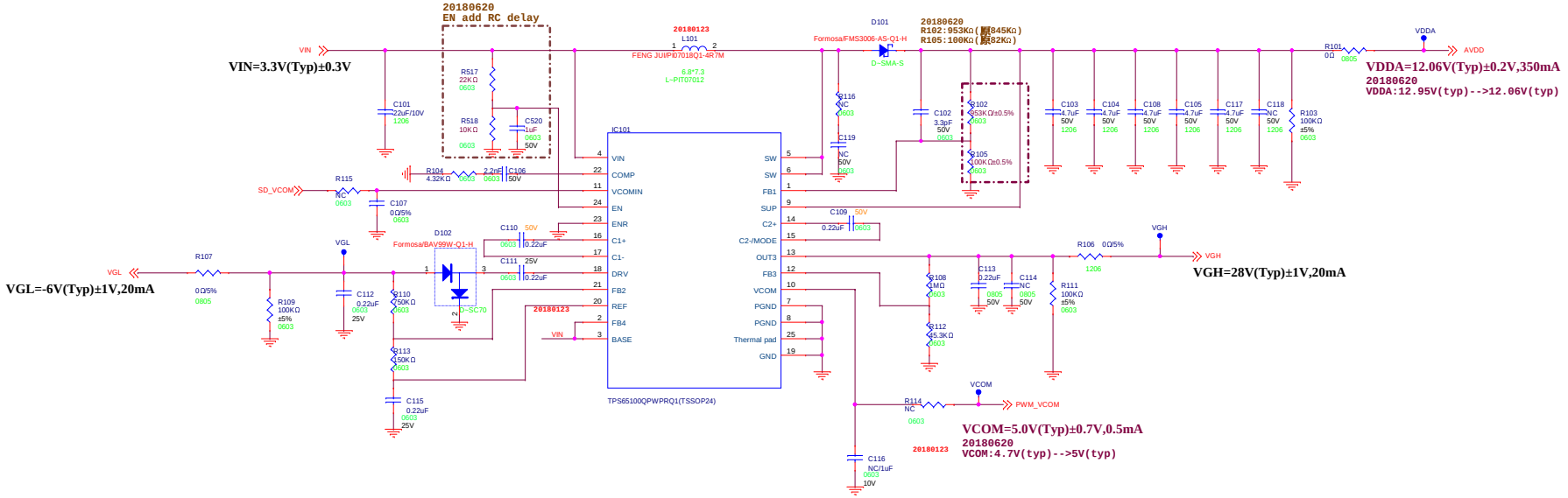

ECN	ECN NO.	DATE	NOTE	DESIGNER	DRAWING	DESIGNED	CHECKED	APPROVED	REF.NO.		MODEL NO.	217EA01-1A0 PWB-Left
					CHUNGHWA PICTURE TUBES CO. LTD				SCALE		DRAWING	SHEET: