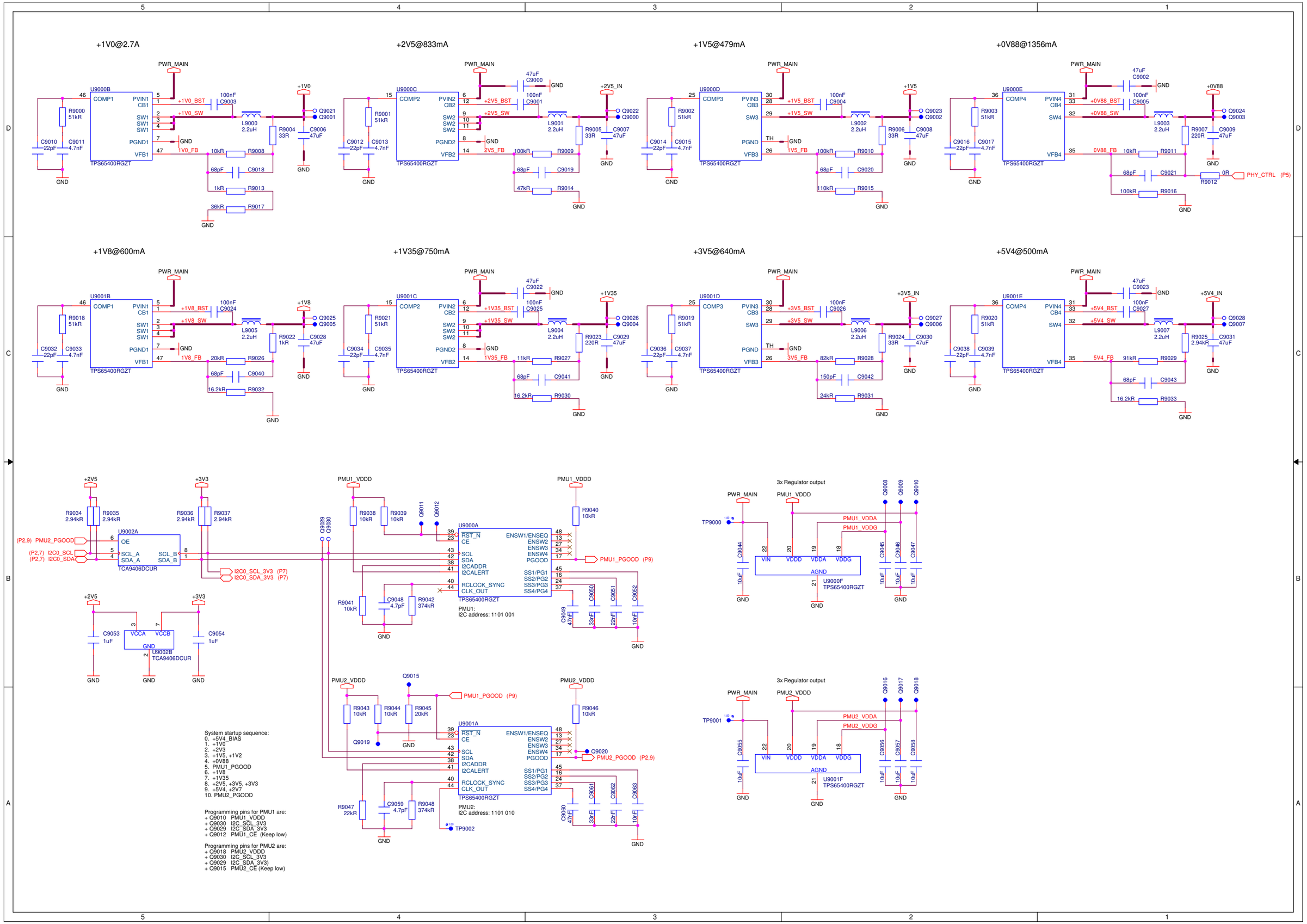
+1V0@2.7A
+2V5@833mA
+1V5@479mA
+0V88@1356mA
+1V8@600mA
+1V35@750mA
+3V5@640mA
+5V4@500mA
PWR_MAIN
TPS65400RGZT
TCA9406DCUR
PMU1_VDDD
PMU2_VDDD
3x Regulator output
PMU1_PGOOD (P9)
PMU2_PGOOD (P2,9)
PHY_CTRL (P5)
PMU1:
I2C address: 1101 001
PMU2:
I2C address: 1101 010
System startup sequence:
0. +5V4_BIAS
1. +1V0
2. +2V3
3. +1V5, +1V2
4. +0V88
5. PMU1_PGOOD
6. +1V8
7. +1V35
8. +2V5, +3V5, +3V3
9. +5V4, +2V7
10. PMU2_PGOOD
Programming pins for PMU1 are:
+ Q9010 PMU1_VDDD
+ Q9030 I2C_SCL_3V3
+ Q9029 I2C_SDA_3V3
+ Q9012 PMU1_CE (Keep low)
Programming pins for PMU2 are:
+ Q9018 PMU2_VDDD
+ Q9030 I2C_SCL_3V3
+ Q9029 I2C_SDA_3V3)
+ Q9015 PMU2_CE (Keep low)