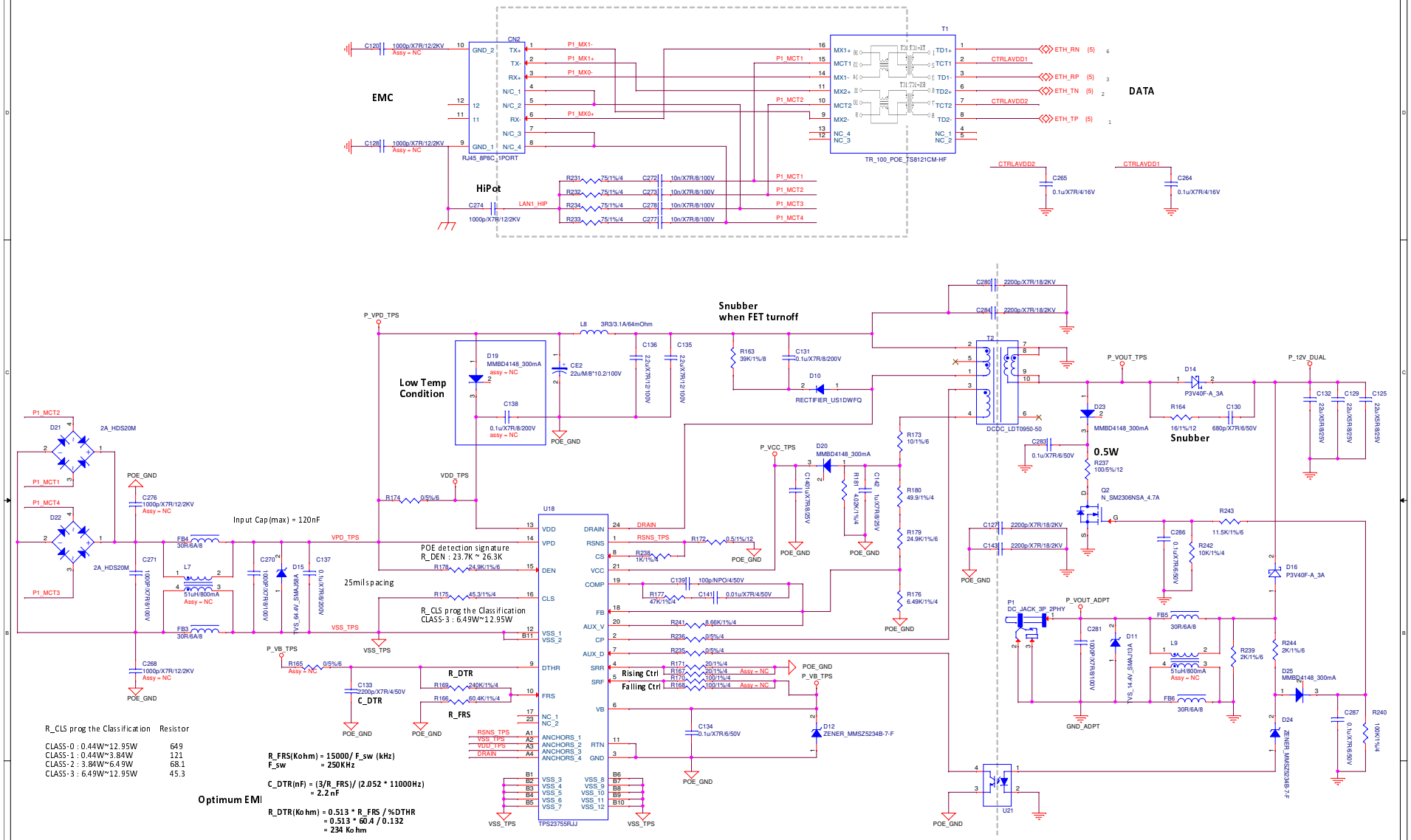
EMC
DATA
HiPot
Snubber
when FET turnoff
Low Temp
Condition
0.5W
Snubber
Input Cap(max) = 120nF
POE detection signature
R_DEN : 23.7K ~ 26.3K
25mils spacing
R_CLS prog the Classification
CLASS-3 : 6.49W~12.95W
R_DTR
R_FRS
C_DTR
Rising Ctrl
Falling Ctrl
R_CLS prog the Classification Resistor
CLASS-0 : 0.44W~12.95W 649
CLASS-1 : 0.44W~3.84W 121
CLASS-2 : 3.84W~6.49W 68.1
CLASS-3 : 6.49W~12.95W 45.3
R_FRS(Kohm) = 15000/ F_sw (kHz)
F_sw = 250KHz
C_DTR(nF) = (3/R_FRS)/ (2.052 * 11000Hz)
= 2.2 nF
R_DTR(Kohm) = 0.513 * R_FRS / %DTHR
= 0.513 * 60.4 / 0.132
= 234 Kohm
Optimum EMI
TPS23755RJJ
TR_100_POE_TS8121CM-HF
RJ45_8PBC_1PORT
DCDC_LDT0950-50
RECTIFIER_US1DWFQ
ZENER_MMSZ5234B-7-F
DC_JACK_3P_2PHY
N_SM2306NSA_4.7A
P3V40F-A_3A
MMBD4148_300mA
P_VPD_TPS
P_VCC_TPS
P_VOUT_TPS
P_12V_DUAL
P_VOUT_ADPT
P_VB_TPS
VDD_TPS
VPD_TPS
VSS_TPS
POE_GND
GND_ADPT
ETH_RN
ETH_RP
ETH_TN
ETH_TP
CTRLAVDD1
CTRLAVDD2
P1_MCT1
P1_MCT2
P1_MCT3
P1_MCT4
P1_MX1+
P1_MX1-
P1_MX0+
P1_MX0-
LAN1_HIP