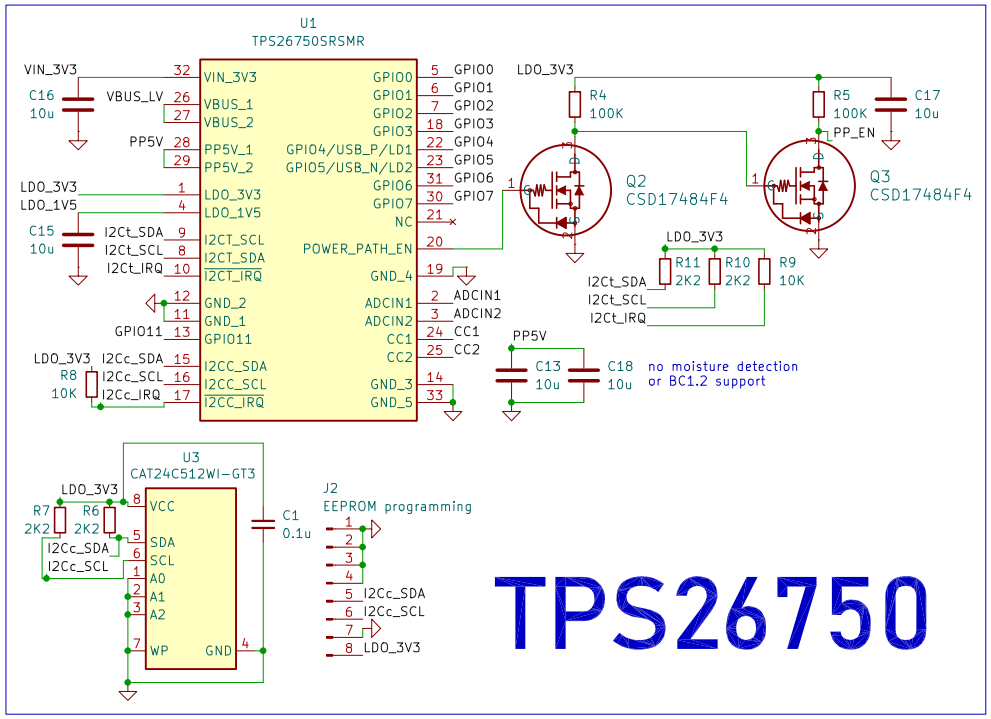

TPS26750

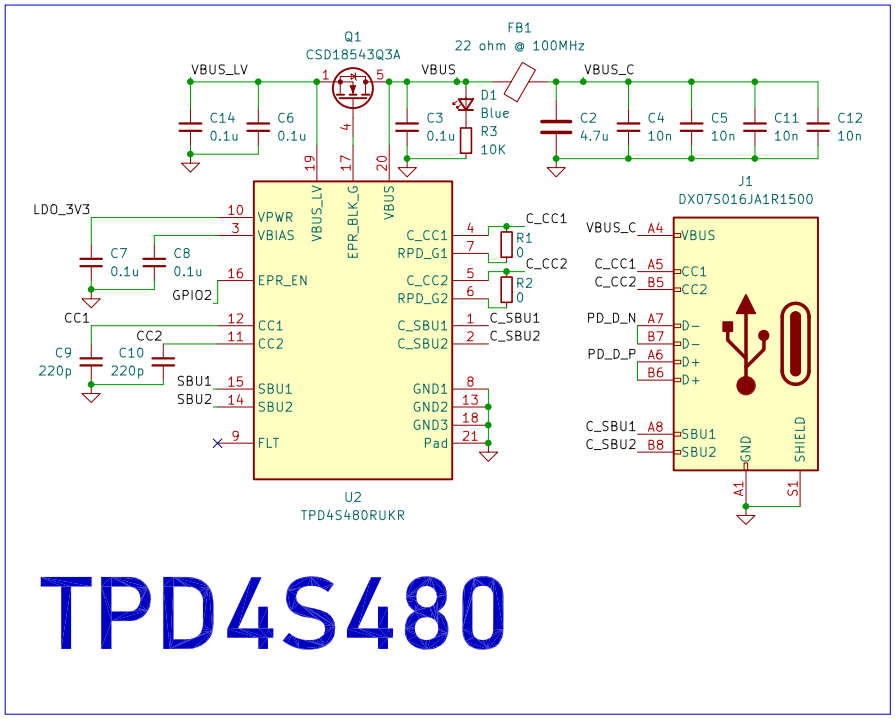

TPD4S480
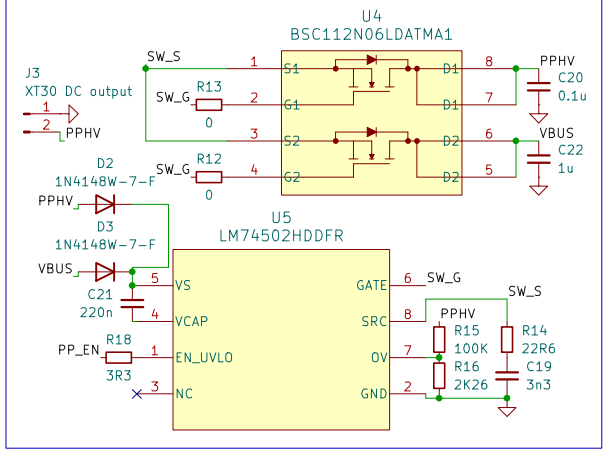
Power switch