<LM25085 failure content>

On our customer's circuit, according to increasing load, the gate voltage will be abnormal.
We guess that the value of Cout is huge.(Cout is normally approx 500uF)
So, may Vout oscillate? So, the cause is huge Cout??

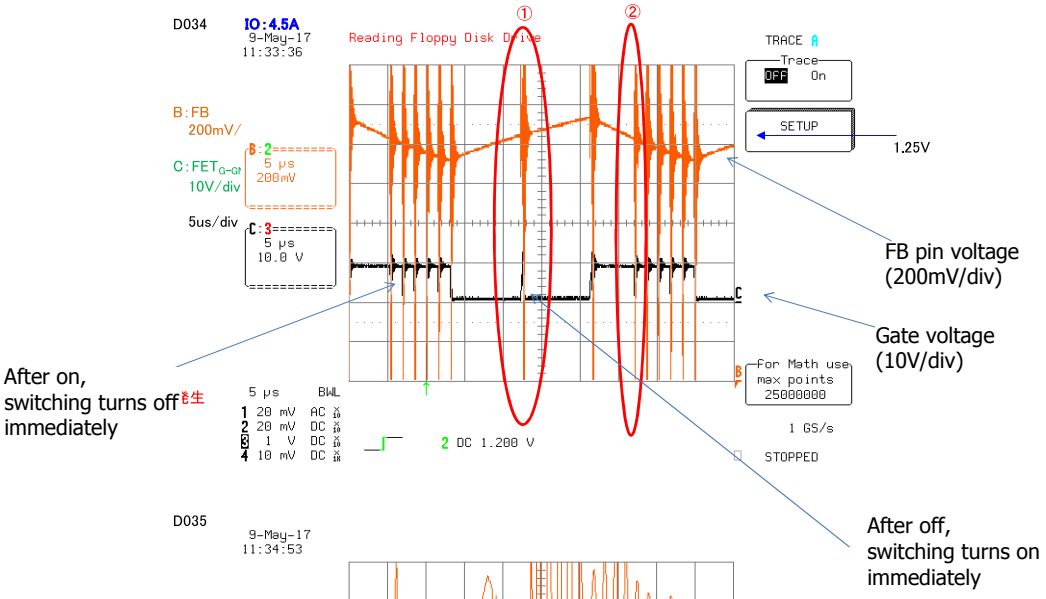

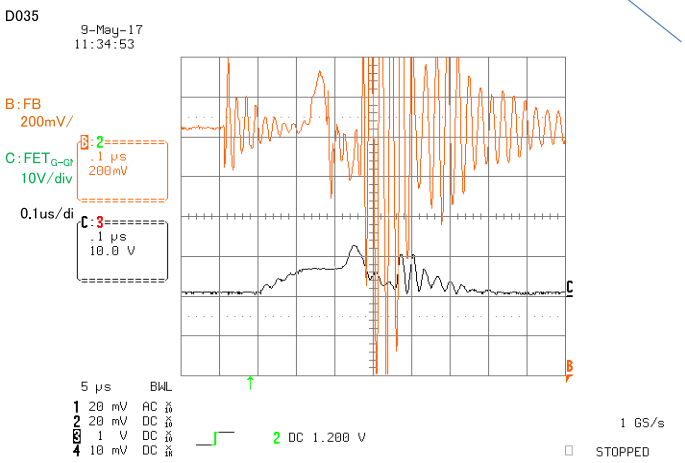

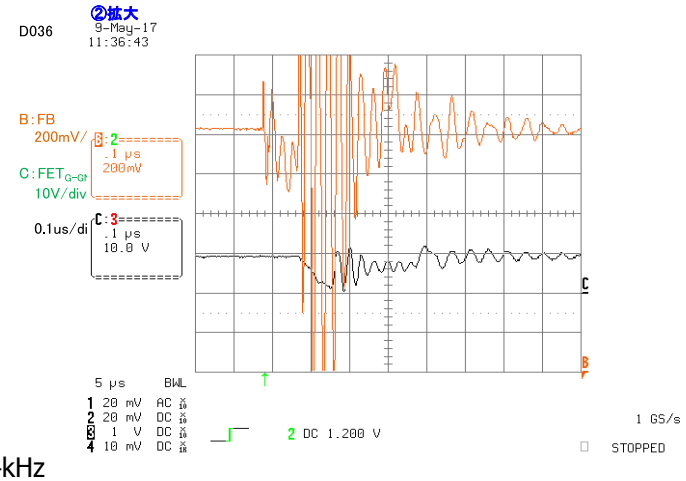

10Vin

Fsw=64kHz
Iout=6.5A
(On the result of the calculation, we think that L=30uH and Cout=700uF are better.Is our recognition correct?)
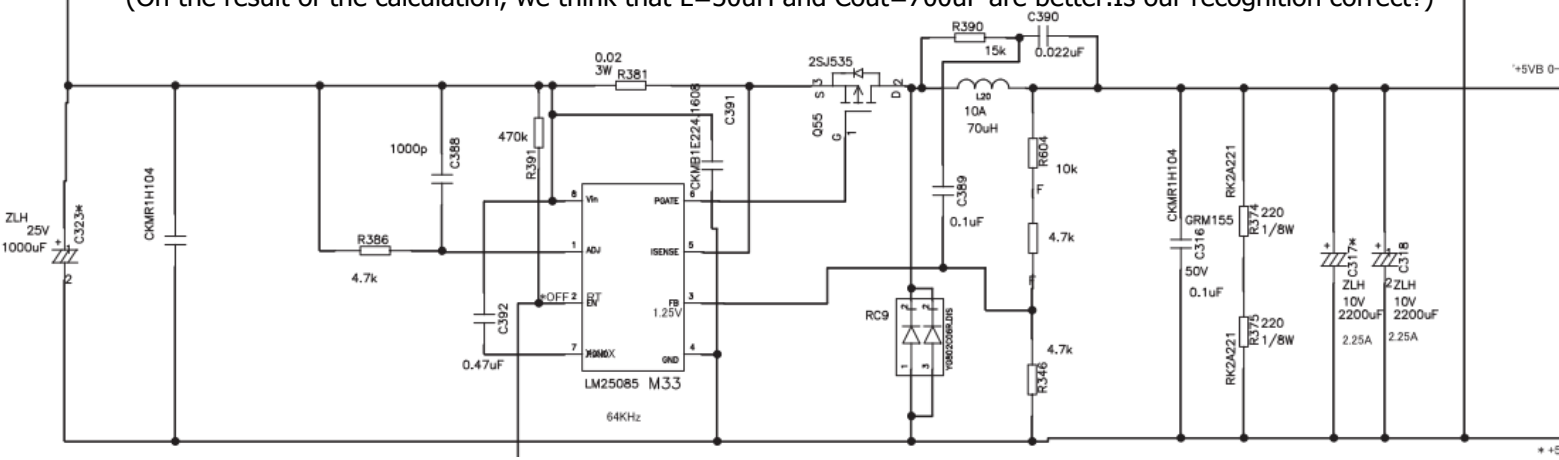
5.15Vout