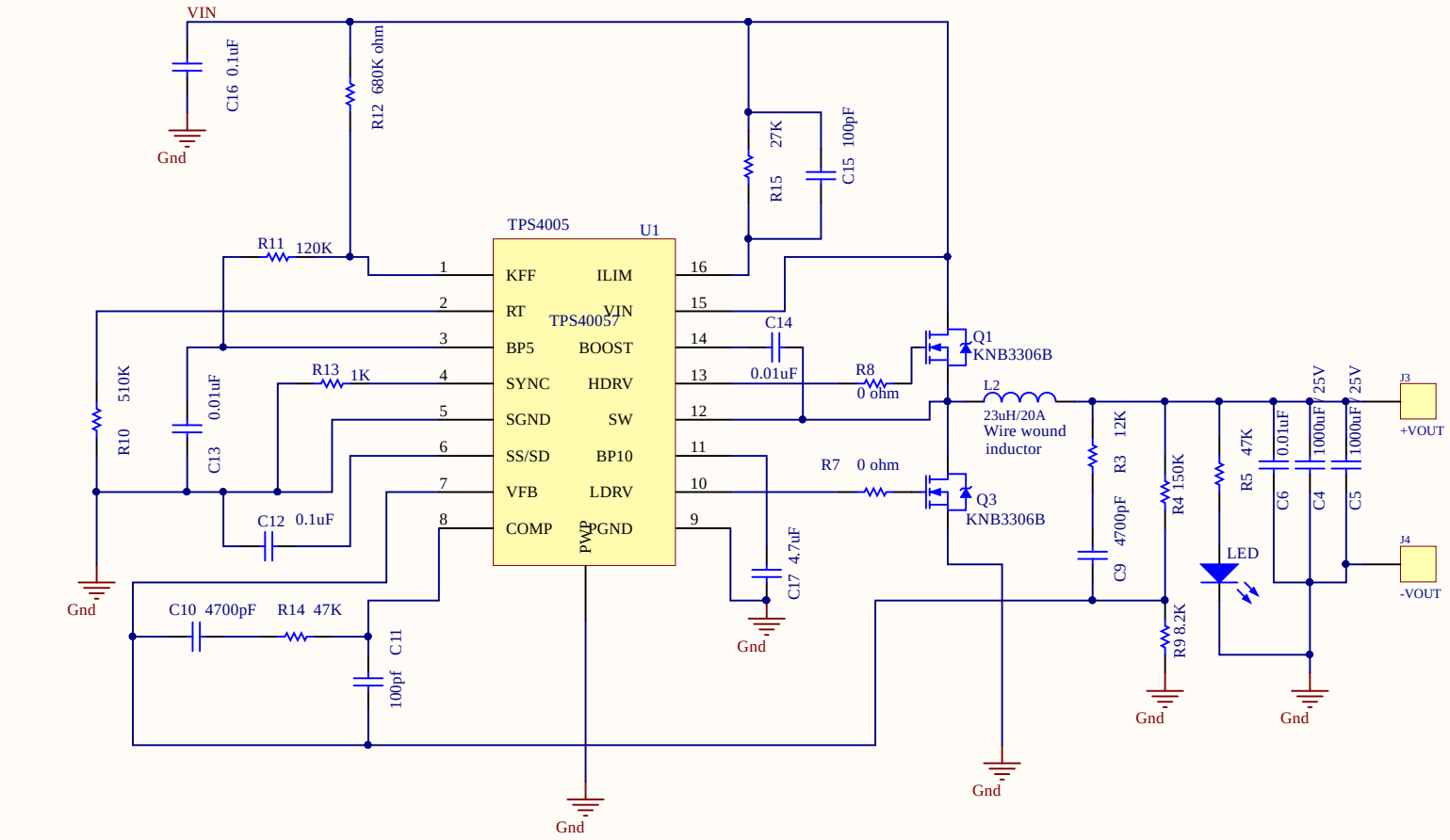

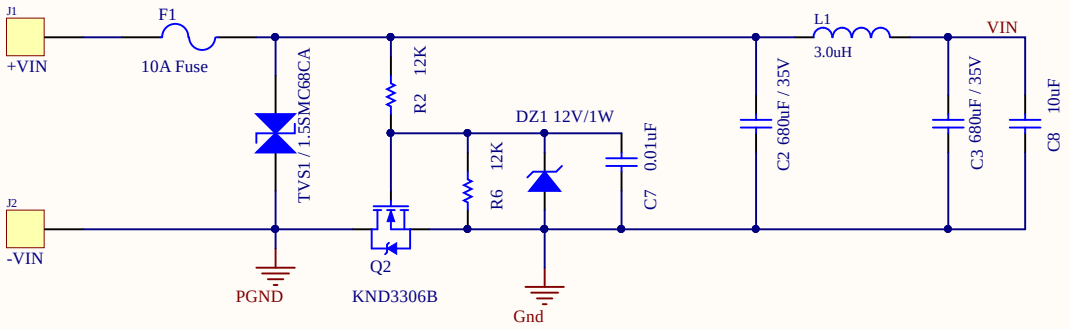

Title		
Size A4	Number	Revision
Date: 30-05-2019	Sheet of	
File: D:\Arun's Projects\..\24V_12V.SchDoc	Drawn By:	