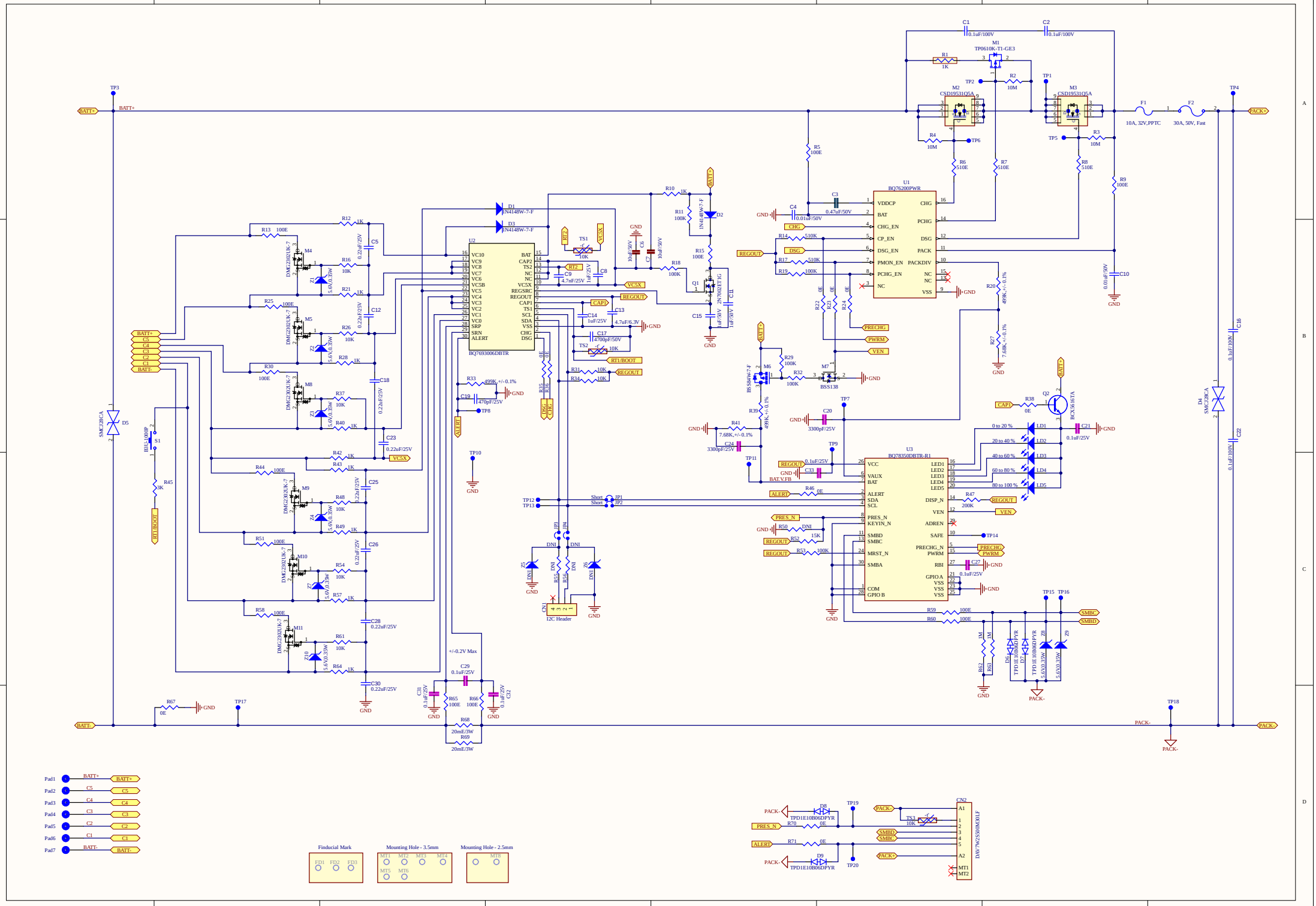
U1
BQ76200PWR
U2
BQ7693006DBTR
U3
BQ78350DBTR-R1
M1
TP0610K-T1-GE3
M2
CSD19531Q5A
M3
CSD19531Q5A
F1
10A, 32V,PPTC
F2
30A, 50V, Fast
BATT+
BATT-
PACK+
PACK-
VC5X
REGOUT
CHG
DSG
PRECHG
PWRM
VEN
CAP1
RT1/BOOT
RT2
ALERT
PRES_N
SMBC
SMBD
12C Header
Fiducial Mark
Mounting Hole - 3.5mm
Mounting Hole - 2.5mm