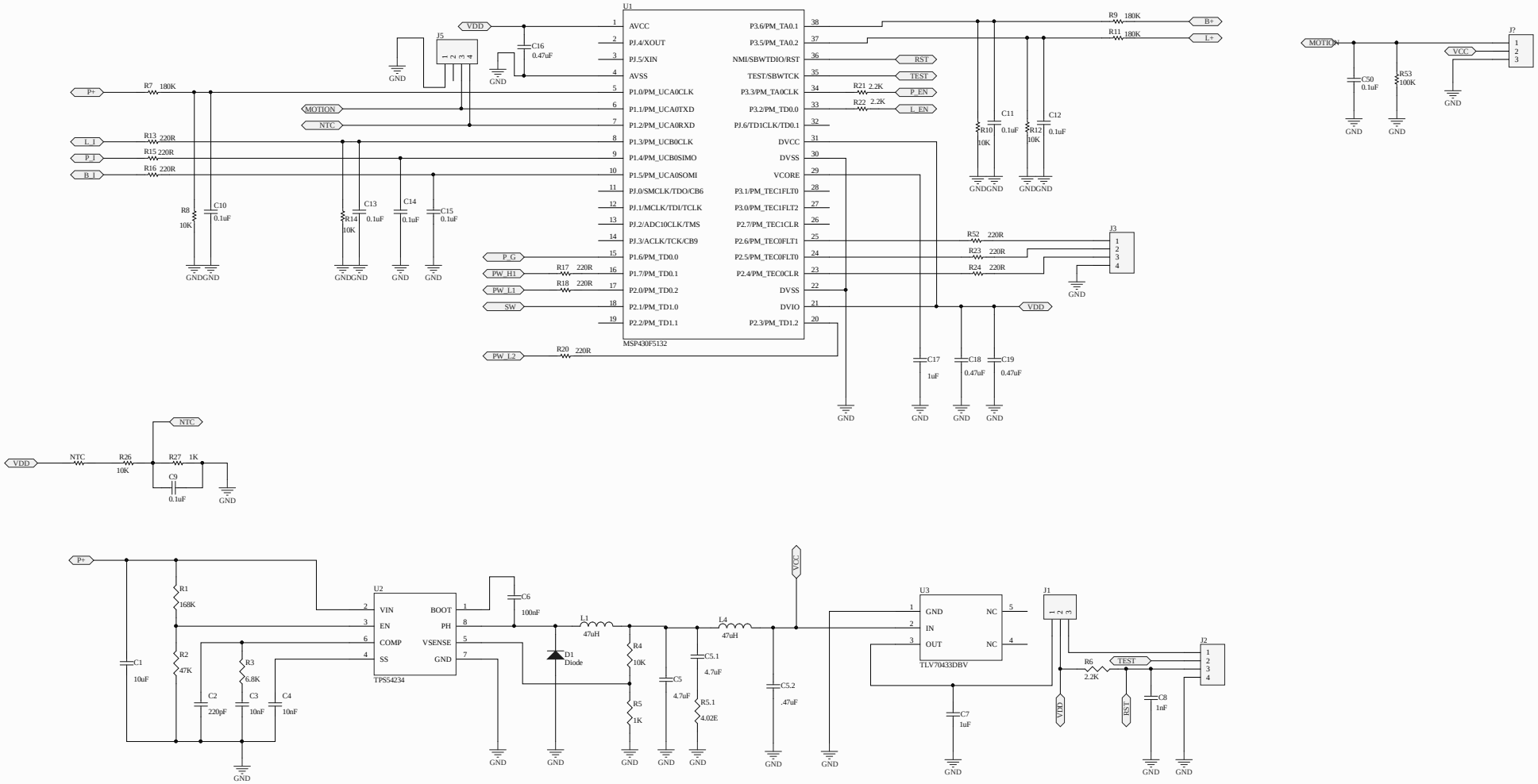

Title		
Size: Letter	Number	Revision
Date: 6/6/2019		Sheet of
File: E:\R&D Devang\...\MPPT_SSL_Sheet1.SchDoc		Drawn By:

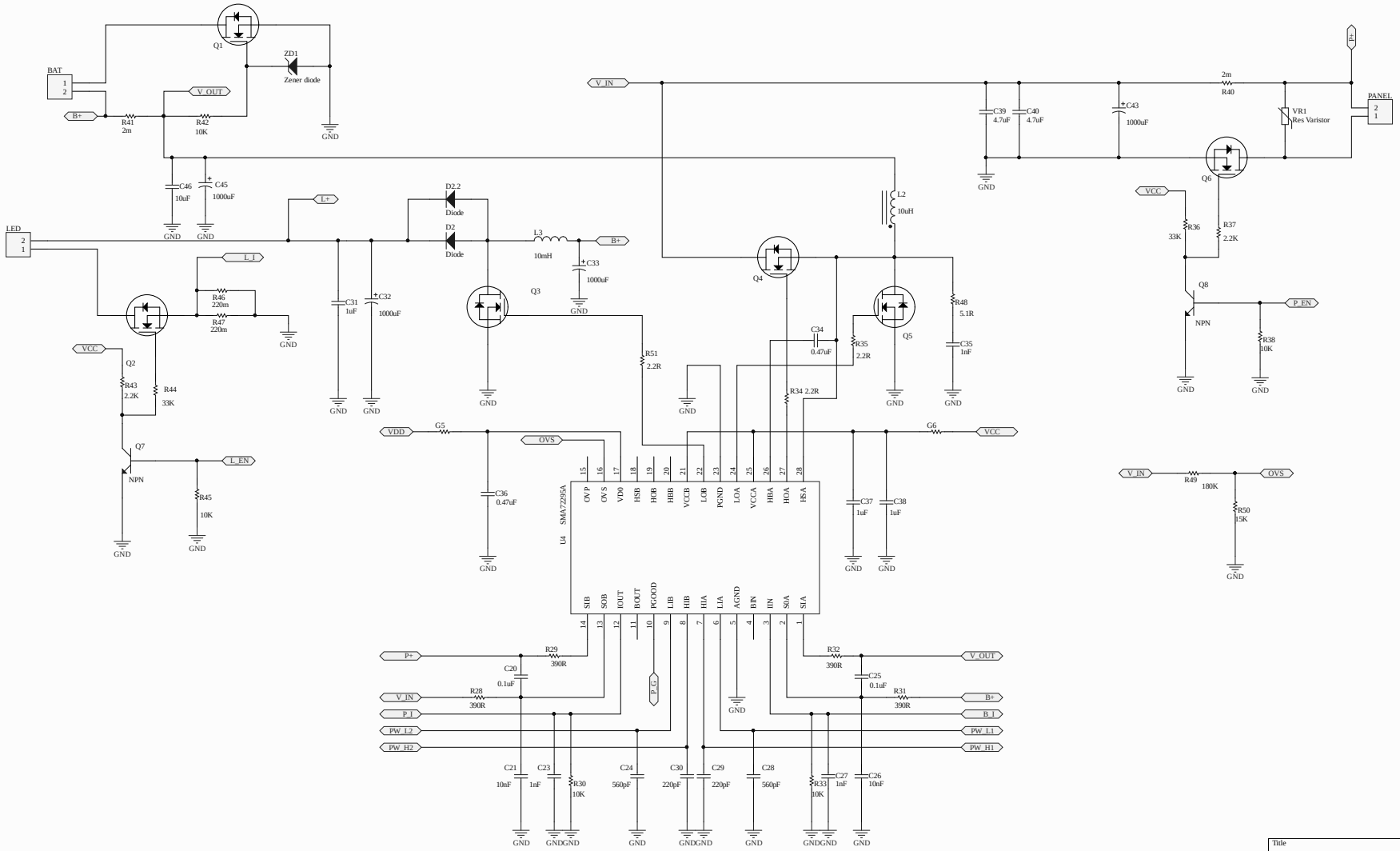

Title		
Size: Letter	Number	Revision
Date: 6/6/2019	Sheet of	
File: E:\R&D Devang\...\MPPT_SSL_Sheet2.SchDoc	Drawn By:	