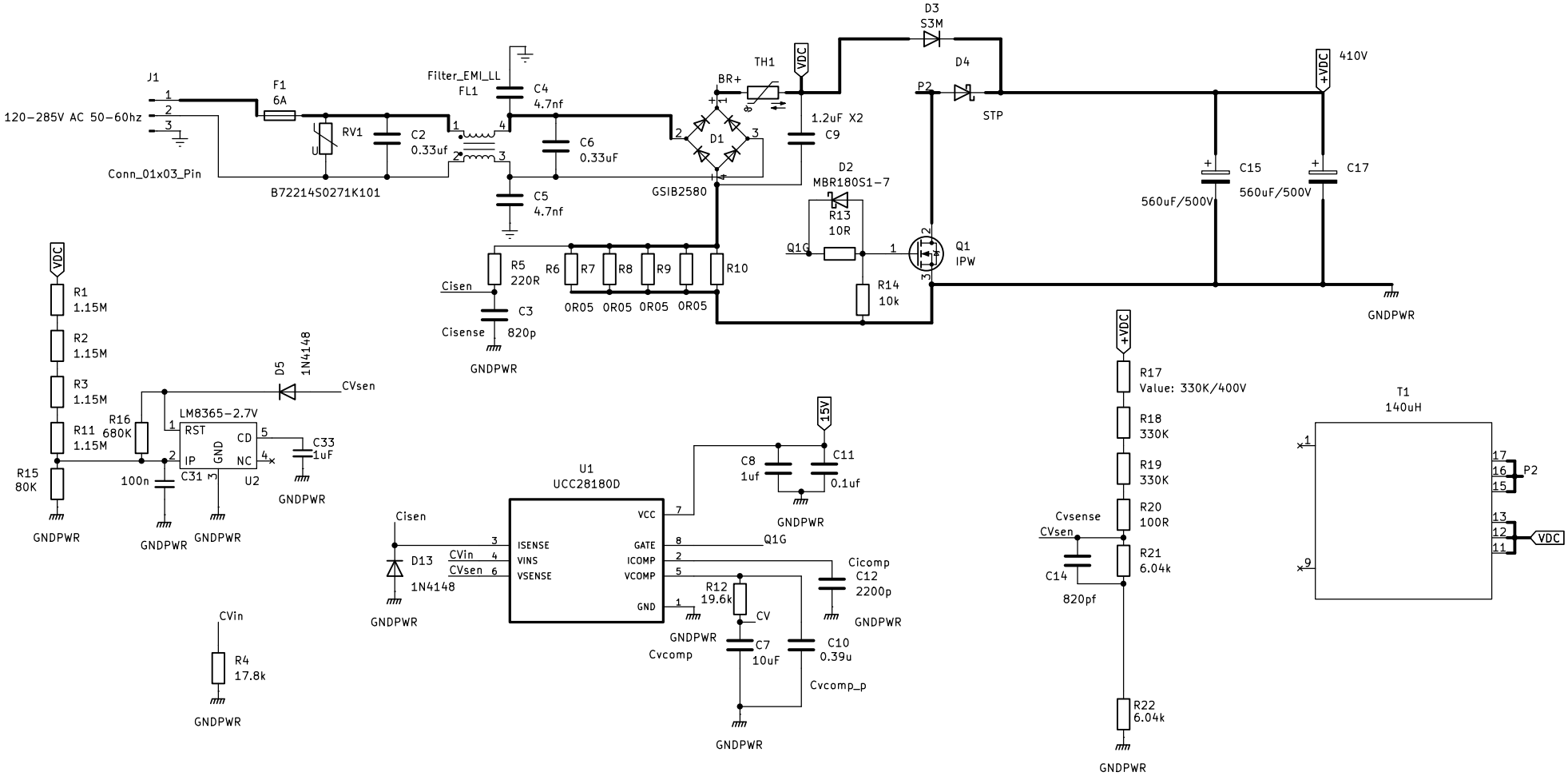
J1
120-285V AC 50-60hz
Conn_01x03_Pin
F1
6A
RV1
B72214S0271K101
C2
0.33uf
Filter_EMI_LL
FL1
C4
4.7nf
C5
4.7nf
C6
0.33uF
BR+
D1
GSIB2580
TH1
VDC
1.2uF X2
C9
D3
S3M
D4
STP
P2
D2
MBR180S1-7
R13
10R
Q1G
Q1
IPW
R14
10k
R5
220R
R6
R7
R8
R9
R10
0R05
0R05
0R05
0R05
Cisen
C3
Cisense
820p
GNDPWR
+VDC
410V
C15
560uF/500V
C17
560uF/500V
GNDPWR
R1
1.15M
R2
1.15M
R3
1.15M
R11
1.15M
R15
80K
R16
680K
D5
1N4148
CVsen
LM8365-2.7V
RST
CD
IP
GND
NC
C31
100n
U2
C33
1uF
GNDPWR
GNDPWR
GNDPWR
GNDPWR
U1
UCC28180D
VCC
ISENSE
VINS
VSENSE
GATE
ICOMP
VCOMP
GND
Cisen
CVin
CVsen
D13
1N4148
GNDPWR
15V
C8
1uf
C11
0.1uf
GNDPWR
Q1G
Cicomp
C12
2200p
GNDPWR
R12
19.6k
CV
GNDPWR
Cvcomp
C7
10uF
C10
0.39u
Cvcomp_p
GNDPWR
CVin
R4
17.8k
GNDPWR
+VDC
R17
Value: 330K/400V
R18
330K
R19
330K
R20
100R
R21
6.04k
Cvsense
CVsen
C14
820pf
R22
6.04k
GNDPWR
T1
140uH
P2
VDC