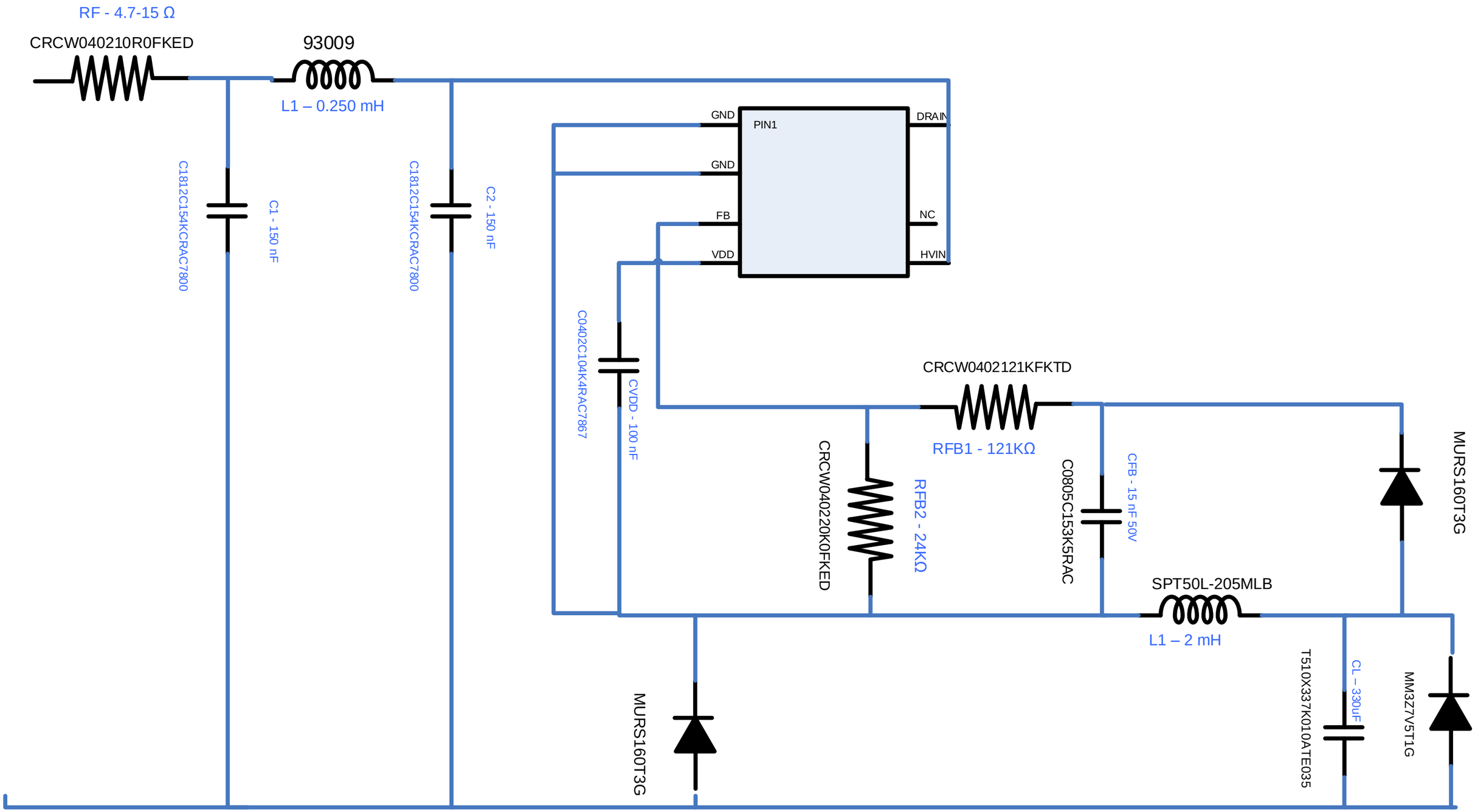
RF - 4.7-15 Ω
CRCW040210R0FKED
93009
L1 – 0.250 mH
C1812C154KCRAC7800
C1 - 150 nF
C1812C154KCRAC7800
C2 - 150 nF
GND
PIN1
DRAIN
GND
FB
NC
VDD
HVIN
C0402C104K4RAC7867
CVDD - 100 nF
CRCW0402121KFKTD
RFB1 - 121KΩ
CRCW040220K0FKED
RFB2 - 24KΩ
C0805C153K5RAC
CFB - 15 nF 50V
MURS160T3G
SPT50L-205MLB
L1 – 2 mH
T510X337K010ATE035
CL – 330uF
MM3Z7V5T1G
MURS160T3G