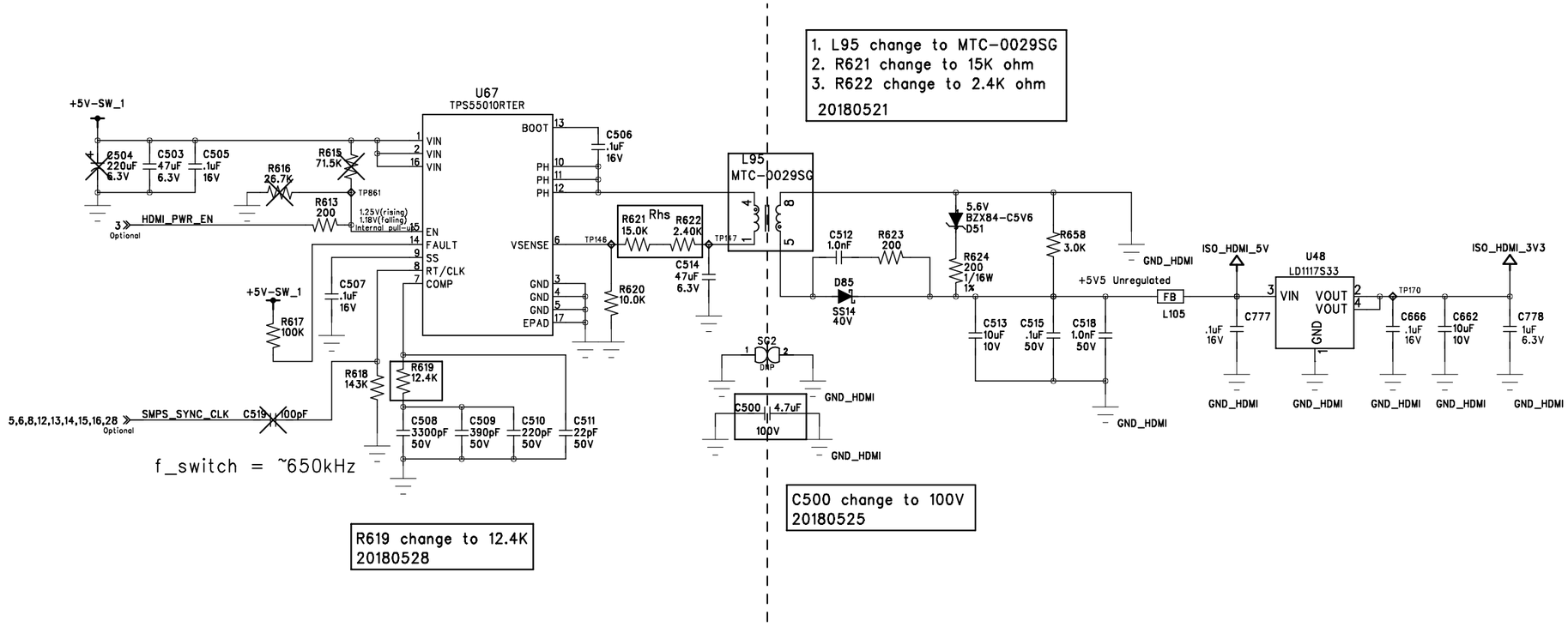
1. L95 change to MTC-0029SG
2. R621 change to 15K ohm
3. R622 change to 2.4K ohm
20180521
U67
TPS55010RTER
+5V-SW_1
C504 220uF 6.3V
C503 47uF 6.3V
C505 .1uF 16V
R615 71.5K
R616 26.7K
TP861
R613 200
1.25V(rising) 1.18V(falling) Internal pull-up
HDMI_PWR_EN
Optional
VIN
VIN
VIN
EN
FAULT
SS
RT/CLK
COMP
BOOT
PH
PH
PH
VSENSE
GND
GND
GND
EPAD
C506 .1uF 16V
C507 .1uF 16V
R617 100K
R618 143K
R619 12.4K
C508 3300pF 50V
C509 390pF 50V
C510 220pF 50V
C511 22pF 50V
SMPS_SYNC_CLK
C519 100pF
5,6,8,12,13,14,15,16,28
Optional
f_switch = ~650kHz
R621 15.0K
Rhs
R622 2.40K
TP146
TP147
C514 47uF 6.3V
R620 10.0K
L95
MTC-0029SG
SG2
DMP
C500 4.7uF 100V
GND_HDMI
C512 1.0nF
R623 200
D85
SS14 40V
5.6V
BZX84-C5V6
D51
R624 200 1/16W 1%
R658 3.0K
C513 10uF 10V
C515 .1uF 50V
C518 1.0nF 50V
+5V5 Unregulated
FB
L105
ISO_HDMI_5V
C777 .1uF 16V
U48
LD1117S33
VIN
VOUT
VOUT
GND
TP170
C666 .1uF 16V
C662 10uF 10V
ISO_HDMI_3V3
C778 1uF 6.3V
R619 change to 12.4K
20180528
C500 change to 100V
20180525