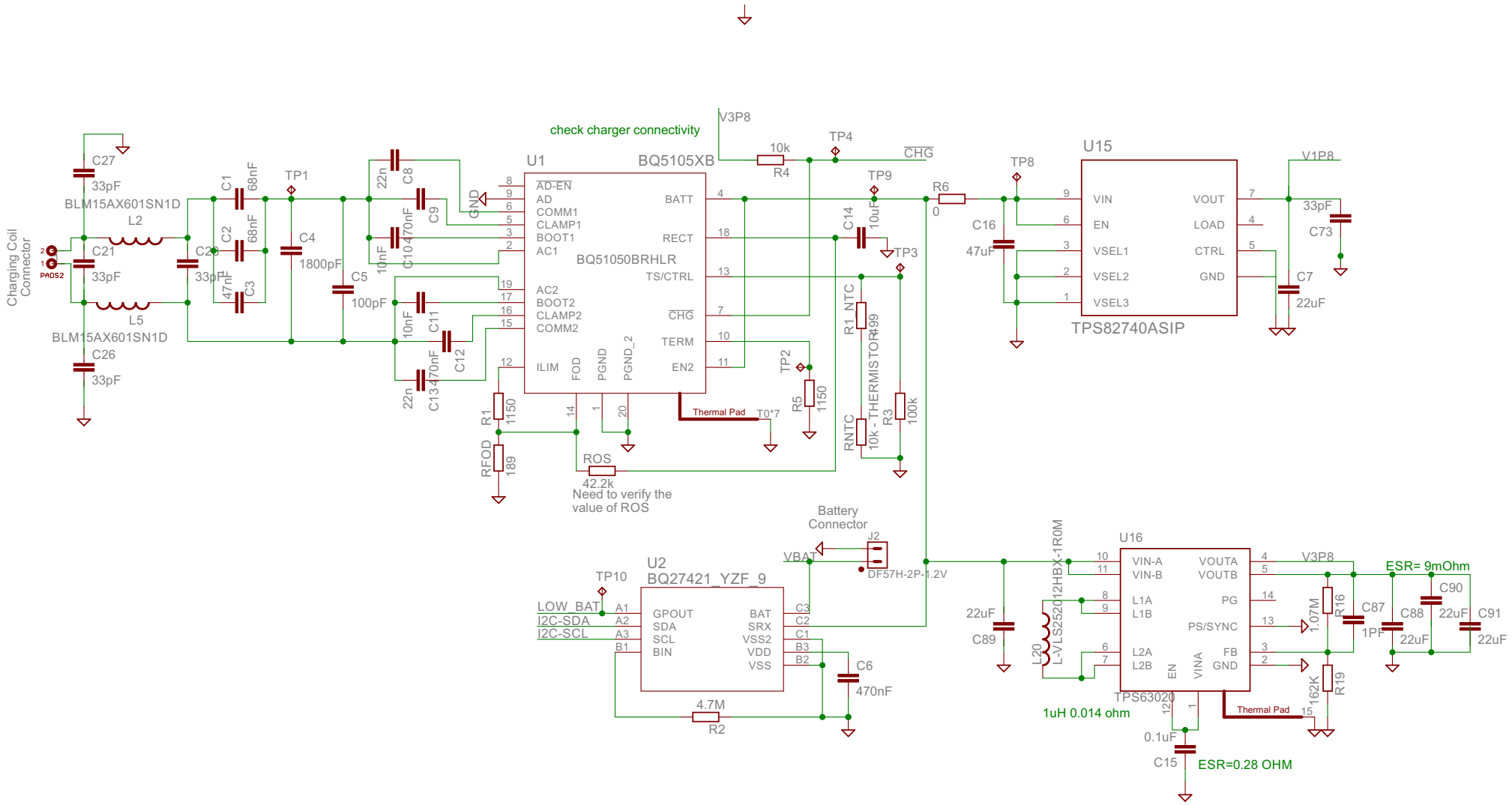
Charging Coil Connector
PADS2
C27
33pF
BLM15AX601SN1D
L2
C21
33pF
C20
33pF
L5
BLM15AX601SN1D
C26
33pF
C1
68nF
C2
68nF
C3
47nF
TP1
C4
1800pF
C5
100pF
22n
C8
C9
470nF
C10
10nF
10nF
C11
C12
22n
C13
470nF
GND
check charger connectivity
V3P8
U1
BQ5105XB
BQ51050BRHLR
AD-EN
AD
COMM1
CLAMP1
BOOT1
AC1
AC2
BOOT2
CLAMP2
COMM2
ILIM
FOD
PGND
PGND_2
BATT
RECT
TS/CTRL
CHG
TERM
EN2
Thermal Pad
T0*7
R1
1150
RFOD
189
ROS
42.2k
Need to verify the value of ROS
10k
R4
TP4
CHG
TP9
R6
0
C14
10uF
TP3
TP2
R5
1150
R1_NTC
499
THERMISTOR
RNTC
10k
R3
100k
TP8
C16
47uF
U15
VIN
EN
VSEL1
VSEL2
VSEL3
VOUT
LOAD
CTRL
GND
TPS82740ASIP
V1P8
33pF
C73
C7
22uF
Battery Connector
J2
DF57H-2P-1.2V
VBAT
TP10
U2
BQ27421_YZF_9
LOW_BAT
I2C-SDA
I2C-SCL
GPOUT
SDA
SCL
BIN
BAT
SRX
VSS2
VDD
VSS
C6
470nF
4.7M
R2
22uF
C89
L20
L-VLS252012HBX-1R0M
1uH 0.014 ohm
U16
VIN-A
VIN-B
L1A
L1B
L2A
L2B
EN
VINA
VOUTA
VOUTB
PG
PS/SYNC
FB
GND
TPS63020
Thermal Pad
0.1uF
C15
ESR=0.28 OHM
V3P8
1.07M
R16
C87
1PF
C88
22uF
ESR= 9mOhm
C90
22uF
C91
22uF
162K
R19