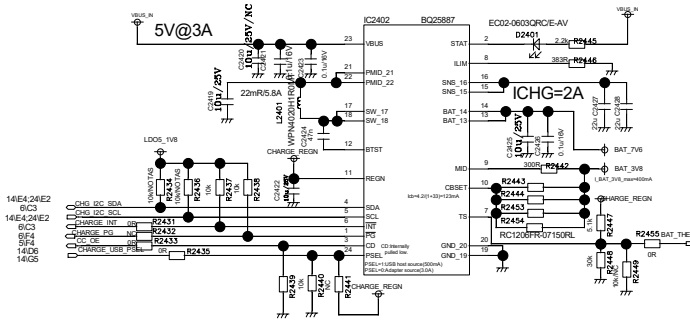

CHARGING CIRCUIT

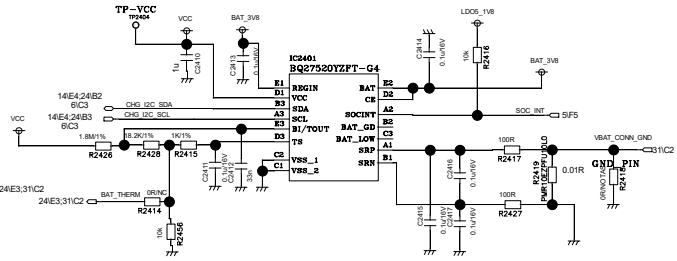

FUEL GAUGE CIRCUIT

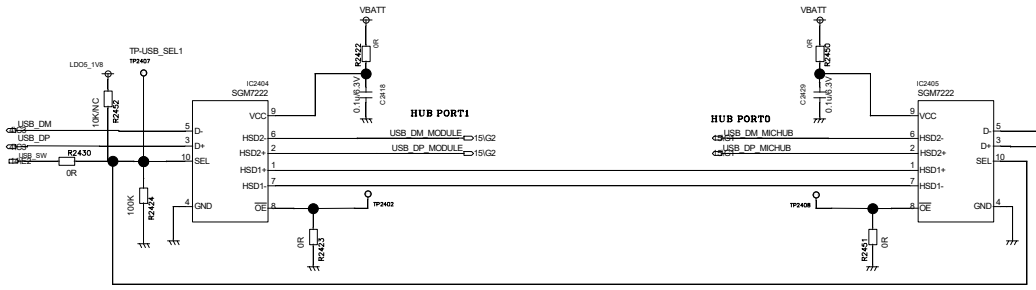

USB SWITCH

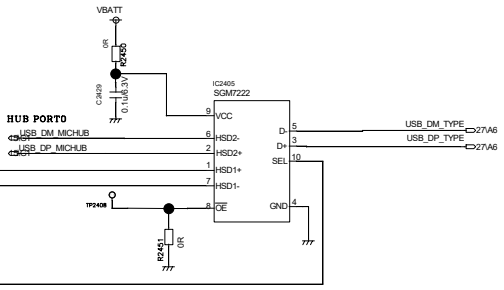

USB SWITCH

$\overline{OE}$	S	HSD1+ HSD1-	HSD2+ HSD2-
0	0	ON	OFF
0	1	OFF	ON
1	×	OFF	OFF